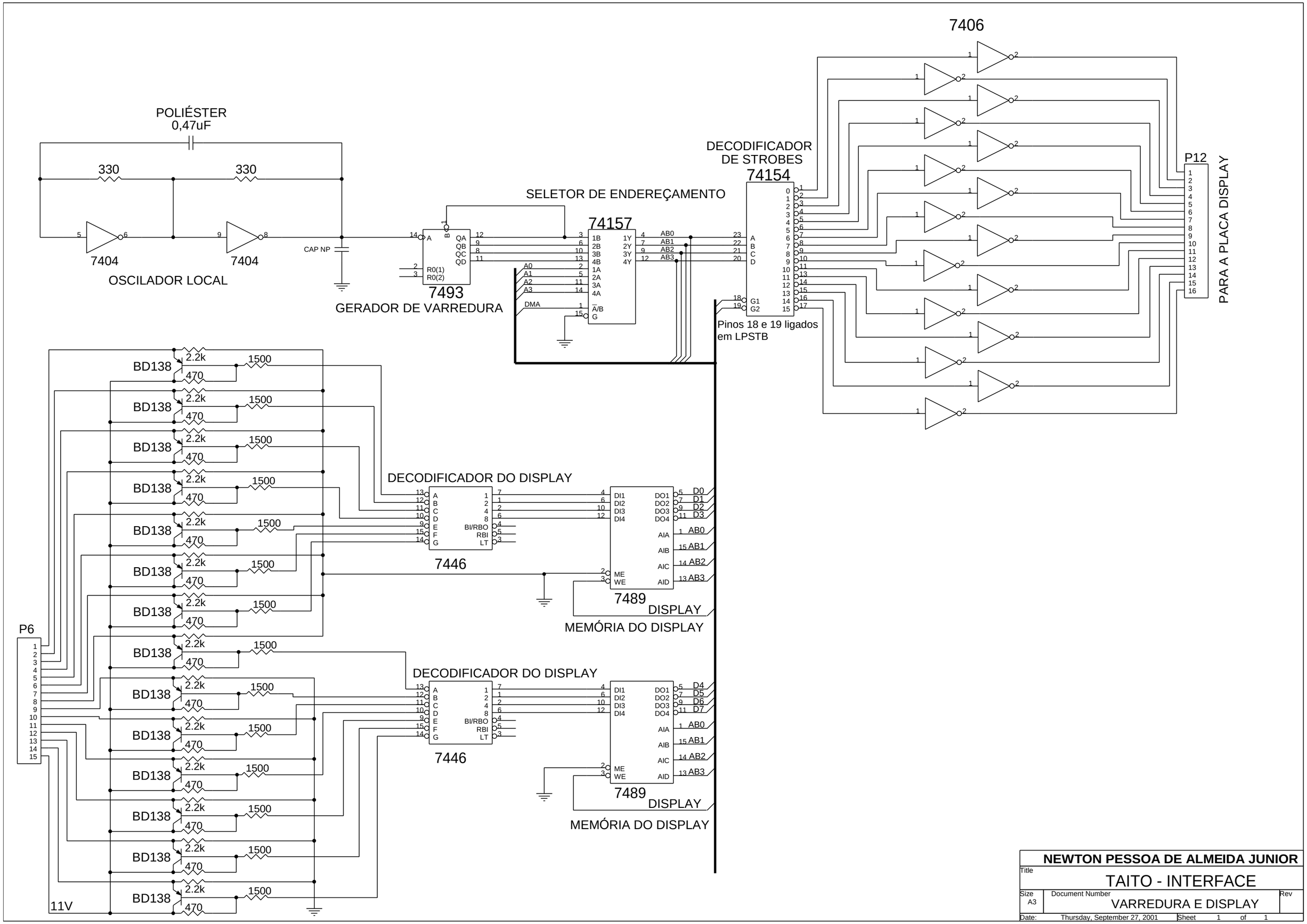

NEWTON PESSOA DE ALMEIDA JUNIOR		
Title: TAITO - INTERFACE		
Size: A3	Document Number: VARREDURA E DISPLAY	Rev
Date: Thursday, September 27, 2001	Sheet 1 of 1	