MAINTENANCE SERVICE MANUAL FT-707

YAESU MUSEN CO., LTD.
C.P.O. BOX 1500
TOKYO, JAPAN

YAESU ELECTRONICS CORP.
P.O. BOX 49
PARAMOUNT, CALIFORNIA, 90723

MAINTENANCE SERVICE MANUAL FT-707

YAESU MUSEN CO., LTD.

C.P.O. BOX 1500

TOKYO, JAPAN

YAESU ELECTRONICS CORP.

P.O. BOX 49

PARAMOUNT, CALIFORNIA, 90723

Agradecimentos ao Barros, PY3UA pelo emprestimo dos manuais para scan
Nov. 2021 PU2SEX Alexandre, www.tabalabs.com.br/esquemateca
Esquema GRATUITO, distribuicao gratuita

INDEX

	Page
FOREWORD	i
SECTION 1 – GENERAL	
GENERAL DESCRIPTION	1-1
SPECIFICATIONS	1-2
SEMICONDUCTORS	1-3
FRONT PANEL CONTROLS AND SWITCHES	1-4
REAR PANEL CONNECTIONS	1-6
MICROPHONE CONNECTIONS	1-7
INSTALLATION	1-8
POWER SUPPLY FP-707	1-11
INTERCONNECTIONS	1-12
RELAY BOX FRB-707	1-13
ANTENNA TUNER FC-707	1-14
OPERATION	1-15
SECTION 2 – TECHNICAL NOTES	
SIGNAL TRACING IN THE FT-707	2-1
RX FREQUENCY RELATIONSHIPS	2-6
CRYSTAL DATA	2-6
TX CONTROL LINE CIRCUIT	2-7
CIRCUIT DESCRIPTION	2-8
SECTION 3 – SERVICING	
OUTER COVER REMOVAL	3-1
FRONT PANEL REMOVAL	3-2
REAR PANEL REMOVAL	3-4
100W PA UNIT REMOVAL	3-5
MAIN CHASSIS EXPLODED VIEW	3-6
BOARD LAYOUT	3-7
SOLDERING AND DESOLDERING TECHNIQUE	3-9
CIRCUIT TRACING REPAIR	3-10
INSTALLATION: OPTIONS	
CW FILTER INSTALLATION	3-12
FIX (CRYSTAL CONTROLLED) OPERATION	3-13
MODIFICATIONS	
S/N IMPROVEMENT ON 80M BAND	3-14
MODIFICATION TO ELIMINATE "CLICKING" NOISE ON CW	3-14
TX IMD DISTORTION IMPROVEMENT	3-15
MARKER MODIFICATION	3-16
PREMIX MODIFICATION	3-16
RECEIVER INPUT CIRCUIT MODIFICATION	3-17
WARC TX MODIFICATION	3-18
FREQUENCY COUNTER PRESET CHANGE	3-19

MAINTENANCE AND ALIGNMENT 3-21
FAULT IDENTIFICATION AND LOCALIZATION 3-29
TROUBLESHOOTING 3-30
RELAY CONNECTION INFORMATION 3-36
CIRCUIT BOARD LAYOUT AND TEST VOLTAGE
RF UNIT (PB-2093A/PB-2201) 3-37
IF UNIT (PB-2094A) 3-43
AF UNIT (PB-2095A) 3-46
AVR UNIT (PB-2099A) 3-49
COUNTER/DISPLAY UNIT (PB-2086A-3540/PB-2098-3540) 3-50
VFO ASSEMBLY (PB-2097A) 3-54
100W PA UNIT (PB-2013) 3-58
HPF/FAN MOTOR CONTROL UNIT (PB-2101) 3-61
LEVEL METER UNIT (PB-2100) 3-62
SW UNIT (PB-2102) 3-63
VR UNIT (PB-2103A) 3-63
SWITCH ASSEMBLIES 3-64
POTENTIOMETER ASSEMBLIES 3-65

SECTION 4 – REPAIR PARTS

PARTS LIST AND ORDERING DATA 4-1
PARTS LIST 4-5

FOREWORD

The purpose of this manual is to provide the reader with information critical to the operation and maintenance of the FT-707 transceiver. Technical details are geared for maximum comprehension by the technician or owner, rather than the design engineer. To this end, the descriptions have been kept brief, while photographs and drawings are utilized liberally.

Use of this manual is entirely at the owner's risk. While we believe the material presented herein to be correct and factual, we assume no liability for damage which may occur when this manual is used as a reference.

The FT-707 has had an enviable service record, and we trust that you will seldom have recourse to this manual. Should reference be necessary, though, we hope and trust that the information presented will be sufficient for your service needs.

Yaesu Musen Company, Ltd.
Tokyo, Japan

Copyright © 1980
Yaesu Musen Company, Ltd.
All rights reserved.

No portion of this manual may be reproduced in any form without written permission of Yaesu Musen Company, Ltd.

SECTION 1 — GENERAL

GENERAL DESCRIPTION 1-1
SPECIFICATIONS 1-2
SEMICONDUCTORS 1-3
FRONT PANEL CONTROLS AND SWITCHES 1-4
REAR PANEL CONNECTIONS 1-6
MICROPHONE CONNECTIONS 1-7
INSTALLATION 1-8
POWER SUPPLY FP-707 1-11
INTERCONNECTIONS 1-12
RELAY BOX FRB-707 1-13
ANTENNA TUNER FC-707 1-14
OPERATION 1-15

YAESU
ALL SOLID STATE HF SSB TRANSCEIVER
FT-707

GENERAL DESCRIPTION

The FT-707 is an all solid state transceiver for the HF amateur bands. Featuring coverage of 80 through 10 meters, the FT-707 is designed for operation on SSB, CW and AM. Nominal power output is 100 watts on SSB and CW, and 50 watts on AM.

The extremely compact size of the FT-707 makes this model particularly well suited for mobile or vacation use. However, the advanced design techniques used in the FT-707 make it competitive with "top of the line" equipment of other manufacturers.

The receiver section includes a new and sophisticated front end, using a Schottky barrier diode ring module and carefully designed gain distribution, for excellent performance in the presence of strong signals. A very-low-noise premix local oscillator circuit is used, which further contributes to optimum receiver performance. Also included in the receiver is Yaesu's famous variable IF bandwidth, using two 8 pole IF filters, allowing continuously variable adjustment of the IF bandwidth, from 300 Hz to 2.4 kHz. Six pole filters of 600 Hz and 350 Hz bandwidth (–6 dB) are available for contest and DX operators, with selection of the SSB filter or CW filter available on the CW mode.

The transmitter side features two rugged bipolar transistors with multiple protection in the final amplifier stage, with bandswitched low pass filter networks providing excellent spectral purity.

Digital plus analog display of the operating frequency is provided. The front panel meter consists of a string of bright discrete LEDs, for easy monitoring of the received signal strength, relative power output, and the transmit ALC level.

Available options for the FT-707 include the FP-707 AC Power Supply, which provides the 13.5 volts DC required by the FT-707. The FP-707 provides outstanding regulation, for many years of trouble-free operation. Also available is the exciting FV-707DM external VFO, which provides twelve memory channels using a sophisticated synthesizer which allows scanning in 10 Hz steps and offset from memory channels. And for matching your antenna system to the 50 ohm impedance requirement of the FT-707, choose the FC-707 Antenna Coupler. All of the above accessories, plus a special mobile mounting bracket, are available from your Yaesu dealer.

SPECIFICATIONS

GENERAL

Frequency coverage:

80 m	3.5–4.0 MHz
40 m	7.0–7.5 MHz
30 m	10.0–10.5 MHz
20 m	14.0–14.5 MHz
17 m	18.0–18.5 MHz
15 m	21.0–21.5 MHz
12 m	24.5–25.0 MHz
10 m	28.0–29.9 MHz

Modes of operation:
LSB, USB, CW, and AM

Power requirements:
13.5 volts DC, negative ground

Current consumption:
DC 1.5 amps receive
DC 20 amps transmit

Case size:
93 (H) x 240 (W) x 295 (D) mm incl. heat sink

Weight:
Approx. 6.5 kg

TRANSMITTER

Power input:

SSB/CW	240 watts DC
AM	80 watts DC

Carrier suppression:
Better than 40 dB

Unwanted sideband suppression:
Better than 50 dB at 14 MHz, 1 kHz mod.

Spurious emissions:
At least 50 dB down

Frequency response:
350–2700 Hz (–6 dB)

Third order distortion products:
At least 31 dB down

Frequency stability:
Less than 300 Hz drift over 30 minutes after 10 minute warmup; less than 100 Hz drift after 30 minute warmup

RECEIVER

Sensitivity:

SSB/CW	0.25 μV for 10 dB S/N
AM	1.0 μV for 10 dB S/N

Selectivity:

SSB	2.4 kHz (–6 dB); 4.0 kHz (–60 dB)
CW*	0.6 kHz (–6 dB), 1.2 kHz (–60 dB)
CW**	350 Hz (–6 dB), 1.2 kHz (–60 dB)
AM	3.6 kHz (–6 dB), 6.8 kHz (–60 dB)

Image rejection:
60 dB (80–12 m)
50 dB (10 m)

Audio output impedance:
4–16 ohms

Audio output:
3 watts @ 4 ohms @ 10% THD

Variable bandwidth control:
Continuous from 300 Hz to 2.4 kHz (SSB/CW modes only)

Modulation type:

(SSB)	Balanced modulator
(AM)	Amplitude modulation of a low power stage

Antenna output impedance:
50 ohms

Microphone impedance:
500–600 ohms (low impedance)

* with optoinal 600 Hz CW filter
** with optional 350 Hz CW filter

SEMICONDUCTORS

Transistors:

2SA496Y	1
2SA733A-P	2
2SA733A-Q	4
2SA952L	13
2SC380TM-Y	12
2SC535A	1
2SC732TM-GR	1
2SC1583G	2
2SC1589	2
2SC1674L	1
2SC1815GR	3
2SC1815Y	29
2SC1923R	2
2SC1959Y	3
2SC2290	2
2SC2395	2
2SC2407	2
2SD235Y	1
2SD592Q	1
2SD880Y	1
2N4427	1
MPS-A13	1

Field Effect Transistors:

2SK19TM-GR	5
2SK30A-Y	1
3SK73GR	7
J310	1

Integrated Circuits (IC):

SN76514N	1
μPC2002V	1
μPA54H	1
AN6552	1
F4024	1
MSM9520RS	1
TA7612AP	1
78L08	3
μPC14305	1
μPC14308	1
ND487C2-3R	1

Germanium Diode:

1N60	26
1S1007	14

Silicon Diodes:

10D1	14
10D10	4
1S1555	66
1SS53	37

Schottky Barrier Diode:

1SS16	6

Zener Diode:

YZ-033	1

Varactor Diodes:

1S2209	1
1S2236	1
FC63	1

Light Emitting Diodes:

GD4-203SRD	1
TLG205	5
TLR205	2
TLY205	3

LED Display:

5082-7623	6

Specifications subject to change without notice.

ACCESSORIES

The following accessories are included with your FT-707.

DC Power Cord	1
DC Fuse (20A)	1

FC-707/FP-707/FT-707/FV-707DM/YM-35

FRONT PANEL CONTROLS AND SWITCHES

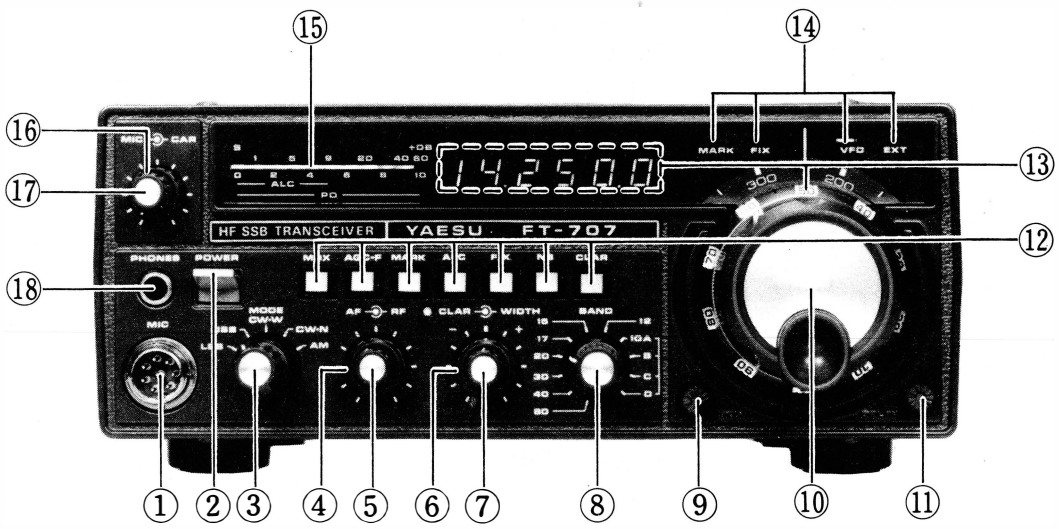

(1) MIC

The microphone jack accepts the microphone input line, push to talk (PTT) control, and scanner control lines (scanner requires optional FV-707DM).

(2) POWER

This is the main power on/off switch for the transceiver.

(3) MODE

This switch selects the desired mode: LSB, USB, CW-W (using SSB filters), CW-N (using optional 600 Hz or 350 Hz filter), or AM.

(4) RF GAIN

This control varies the gain of the receiver RF and IF stages. Clockwise rotation increases the gain level.

(5) AF GAIN

This control varies the gain of the audio amplifier stage. Clockwise rotation increases the AF volume level.

(6) WIDTH

The WIDTH control varies the IF passband from 2.4 kHz down to approximately 300 Hz (−6 dB).

(7) CLAR

This control allows offset from the VFO frequency of approximately ±3 kHz on receive, when the front panel CLAR switch is pushed.

(8) BAND

This switch selects the desired band.

(9) VOX GAIN

This control varies the sensitivity of the VOX (voice operated T/R control) system.

(10) MAIN TUNING KNOB

This knob drives the main tuning variable capacitor, for control of the operating frequency.

(11) DELAY

This control provides adjustment of the VOX relay hang time. It may be set for your individual requirements for CW or SSB operation.

(12) SELECT switches

MOX — This switch selects manual activation of the transmitter. Push the switch once to close the PTT circuit, and again to allow receiver recovery.

AGC F — Push this switch to select fast recovery time for the receiver AGC (Automatic Gain Control) circuitry. When this button is not pushed, slow AGC recovery will be selected.

MARK — Push this button to activate the crystal calibrator (marker) circuit. The calibrator signal will be heard every 25 kHz.

ALC — This switch checks the ALC level by the LED meter. When this button is not

pushed, the LED meter indicates TX relative power output (PO).

FIX — Push this switch to operate on a fixed channel.

NB — This button activates the noise blanker circuit.

CLAR — Push this button to activate the receiver offset tuning (clarifier) feature.

(13) DIAL

The main tuning dial is calibrated every 50 kHz, with dial skirt markings every 1 kHz, for precise frequency determination.

(14) INDICATOR LEDs

These LED indicators provide visual reminders of calibrator, fixed channel (using an optional crystal), VFO, or external VFO operation.

(15) LEVEL METER

A string of colored LEDs provides visual indication of the received signal strength, relative power output, and the transmitter ALC level.

(16) CAR

The carrier control adjusts the CW or AM carrier level.

(17) MIC GAIN

This control varies the gain of the microphone amplifier stage during SSB or AM operation.

(18) PHONES

This is a standard phone plug for connection of your station headphones. The impedance is 8 ohms.

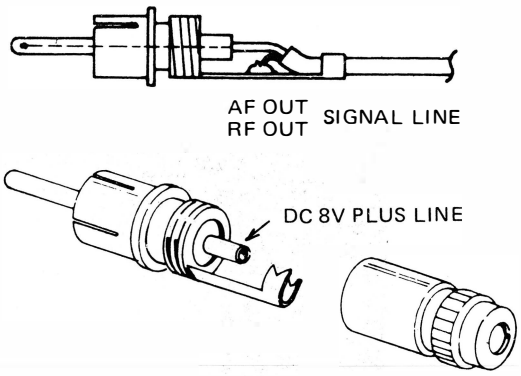

Pin plug

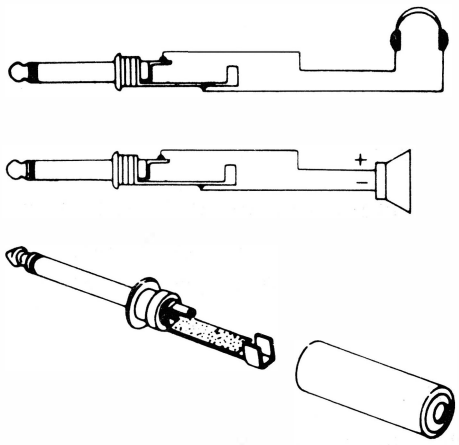

Headphone and external speaker connections

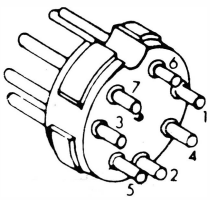

PIN No.

1 FAST CONT(MIC)
2 DOWN CONT(MIC)
3 E
4 PTT
5 UP CONT(MIC)
6 TX 13.5V
7 PATCH MIC IN

ACC Plug

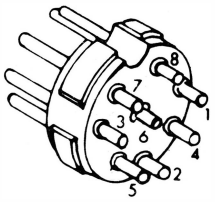

PIN No.

1 E
2 TX 8V
3 E
4 8V
5 VFO FIX 8V
6 13.5V
7 EXT VFO IN
8 MEMORY OUT

EXT VFO Plug

REAR PANEL CONNECTIONS

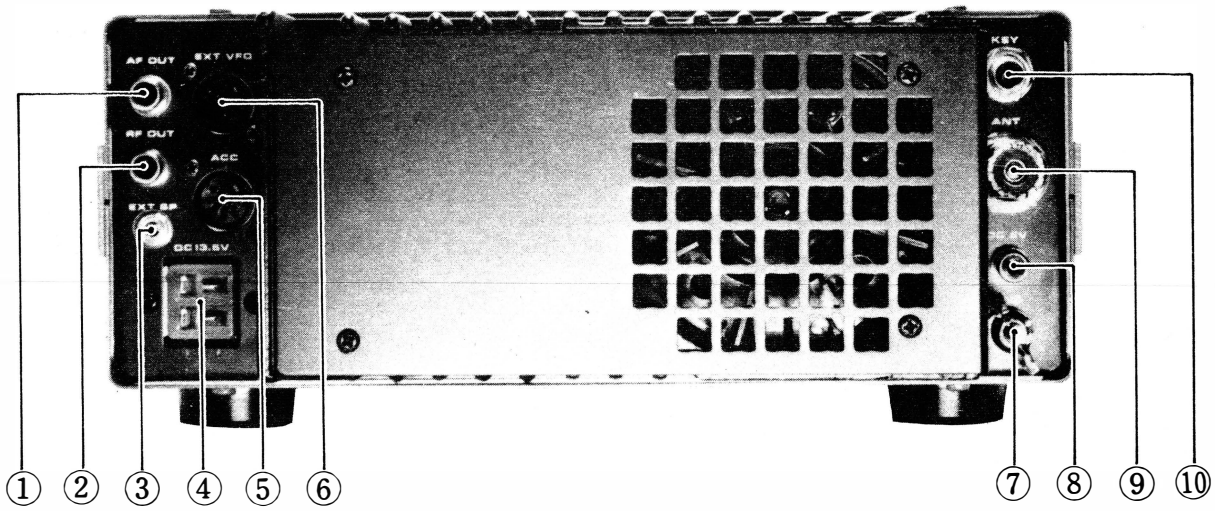

(1) AF OUT

This is an audio output jack which provides approximately 200 mV of audio output (before the AF GAIN control) for use with a tape recorder, etc.

(2) RF OUT

This is a low level signal frequency output jack for use with a transverter. The output is at 50 ohms impedance, at a level of 220 mV.

(3) EXT SP

This is a jack for connection to your station's external speaker. The FT-707 internal speaker will be cut off when a plug is inserted into this jack. The audio output impedance is 8 ohms.

(4) DC 13.5V

Connect this jack only to a DC supply of 13.5 volts, negative ground. Never connect AC power directly to this jack.

(5) ACC

The accessory plug accepts microphone input and PTT control lines, while providing connections to the output scanning control lines and the transmitter TX 13.5V line.

(6) EXT VFO

This jack provides connections to the FV-707DM External VFO.

(7) GND

Connect a good earth ground at this point.

(8) DC 8V

This jack provides an output of 8 volts DC for use with the FC-707 Antenna Coupler. The 8 volt line provides power for the FC-707 panel lamps.

(9) ANT

This is a standard UHF connector for connection to the station antenna system.

(10) KEY

Connect your CW key at this jack.

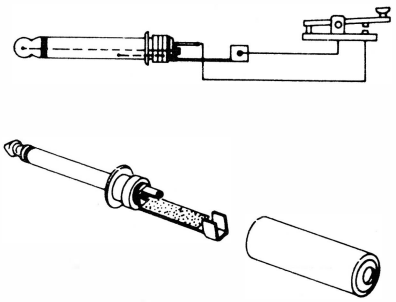

Key plug connections

MICROPHONE CONNECTIONS

YM-34

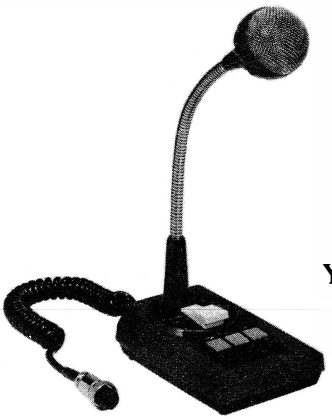

YM-38

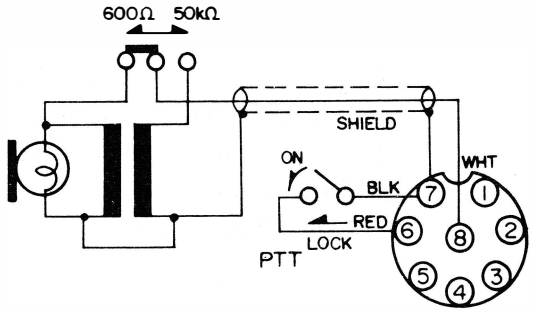

YM-34 MICROPHONE CONNECTIONS

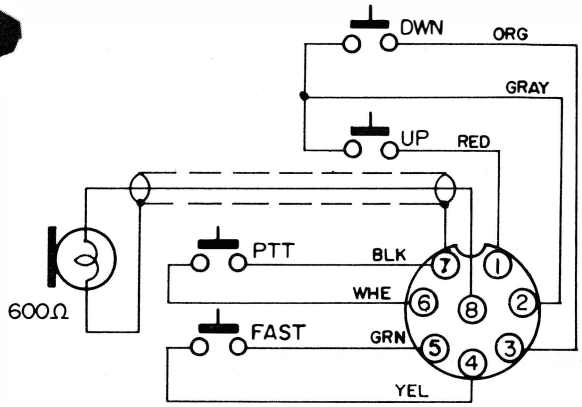

YM-35/YM-38 MICROPHONE CONNECTIONS

YM-35

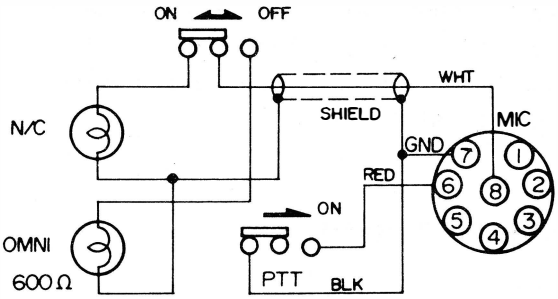

YM-36 MICROPHONE CONNECTIONS

YM-36

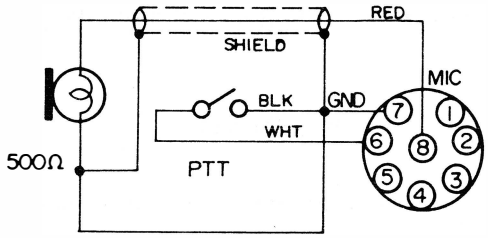

YM-37 MICROPHONE CONNECTIONS

YM-37

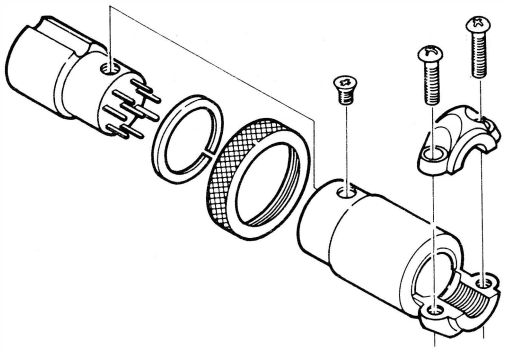

INSTALLATION

ANTENNA CONSIDERATIONS

The FT-707 is designed for use into a 50 ohm resistive load. While minor deviations from the 50 ohm figure are of no consequence, the automatic final protection (AFP) circuitry will reduce the power output if high SWR conditions are encountered.

However, your FT-707 AFP circuitry and final amplifier components are tolerant of the minor SWR conditions present in many amateur installations. At an SWR of 3:1, for example, 50% of the full rated output power will be obtained.

The Yaesu RSL series of mobile antennas is available from your Yaesu dealer, for mobile installations.

GROUND CONNECTIONS

This transceiver should be connected to a good earth ground for best performance and safety. Use a heavy, braided wire, less than 10 feet line, for connection to your station ground buss. The ground line should be connected to the transceiver rear panel GND terminal.

POWER REQUIREMENTS

This transceiver requires a power source of 13.5 volts DC, negative ground, at 20 amps on voice peaks. It is not possible to use this transceiver on 24 volts DC, or on AC voltages of any kind.

WARNING

Use of this equipment from improper DC voltages, or from AC voltages of any kind, will void the warranty on this equipment.

Please refer to the following sections for details on making power connections for mobile or base station installations.

FUSE REQUIREMENTS

A 20 amp DC fuse is located in the DC cable for this equipment. When changing fuses, be absolutely certain to use a fuse of the proper rating.

WARNING

Our warranty does not cover damage caused by use of an improper fuse.

MOBILE INSTALLATION

The DC cable for mobile installations is included with your transceiver.

Four under-dash mounting, a special mobile mounting bracket is available from your Yaesu dealer. This bracket, known as the MMB-2, allows installation of the FT-707 alone, or it may be adjusted to allow installation of the FT-707 and FV-707DM, or the FT-707 and FC-707 (the FC-707 and FV-707 may also be installed together, if desired).

The FT-707 should be mounted where there is adequate space around the heat sink to allow free circulation of air. Allow a space of about 20 cm behind and around the heat sink, and do not position the transceiver directly in the path of the heater ducts.

When making battery connections, it is absolutely essential that the proper polarity of the power cord be observed.

WARNING

Permanent damage will result if reversed-polarity supply voltage is applied to this transceiver. Our warranty does not cover damage caused by reversed power supply connections.

It is recommended that power connections be made directly to the battery instead of to the ignition switch. The battery provides considerable filtering against ignition noise, while connection to the ignition switch can place the FT-707 in a noise-producing circuit. The power lead must be kept as short as possible, and you should keep the lead away from ignition cables as much as possible.

When making battery connections, be certain to connect the RED power cable lead to the POSITIVE (+) battery terminal, and connect the BLACK lead to the NEGATIVE (–) terminal.

Before connecting the DC cable to the transceiver, check the battery voltage with the engine running fast enough to show a charge on the vehicle's ammeter. If the voltage exceeds 15 volts, the automobile voltage regulator should be adjusted, so as to limit the maximum voltage to less than 15 volts. As well, do not operate this transceiver from a power source of less than 12 volts. The transceiver should always be turned off when the car is started, to prevent transients in the automobile electrical system from damaging the transistor circuitry of the FT-707.

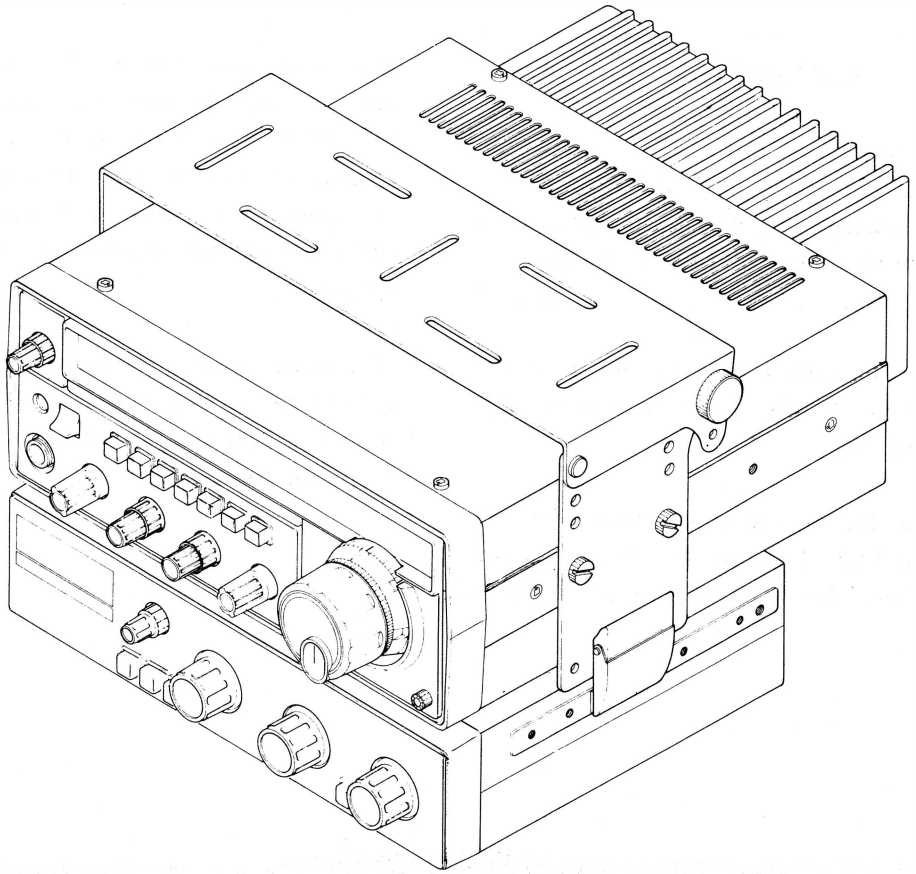

FT-707/FC-707/MMB-2

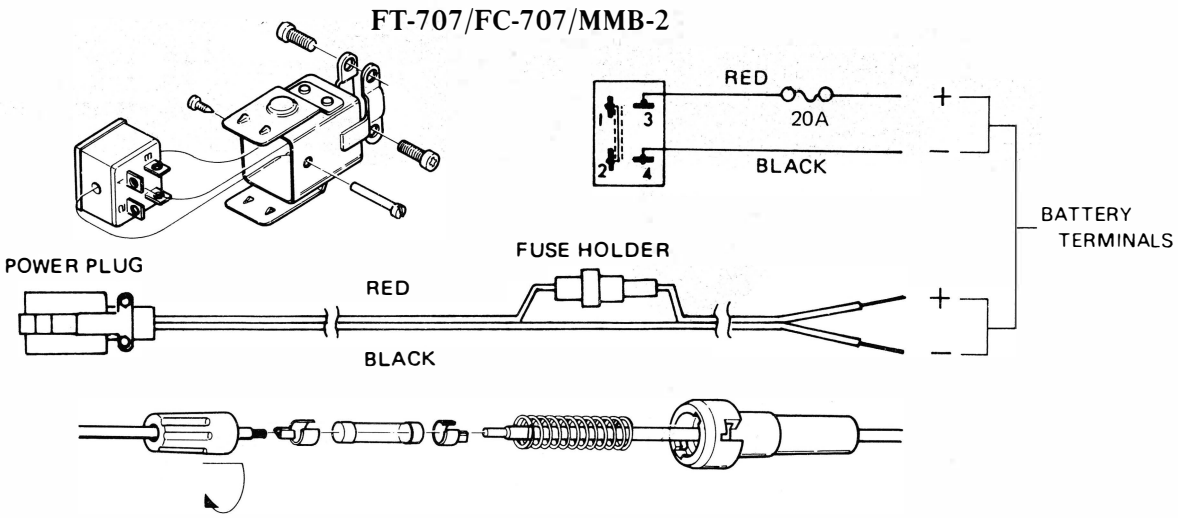

POWER CORD CONNECTIONS

BASE STATION INSTALLATION

The FP-707 AC Power Supply is expressly designed for the FT-707 transceiver, allowing operation from AC power sources of 100/110/117/200/220/234 volts, 50/60 Hz.

Before attempting operation of the FP-707 from AC mains, check to see that the voltage specification on the rear panel of the power supply matches your local supply voltage. This inspection must be made before applying power to this equipment.

> **WARNING**
>
> Operation of the FT-707 directly from AC mains, or operation of the FP-707 from improper supply voltages, or use of an improper fuse in either model, shall void the warranty.

Please refer to the power transformer primary connection chart for details of the proper connections inside the FT-707.

An AC fuse is located on the rear panel of the FP-707. For AC 100/110/117 volts, use only a 6 amp fuse. For 200/220/234 volts AC, use only a 3 amp fuse.

Once the power transformer and fuse inspections have been duly completed, connect the AC cable of the FP-707 to the wall outlet. Insert the DC plug from the FP-707 into the FT-707 DC 13.5V jack on the rear panel of the transceiver.

Connect a 50 ohm antenna or dummy load to the rear panel ANT jack.

Connect your station headphones, if used, to the front panel PHONES jack. Insertion of a plug into this jack automatically cuts off the internal speaker.

If you are using an external speaker, its plug may be connected to the rear panel SP jack. Insertion of a plug into this jack also cuts off the internal speaker. If headphones are used, insertion of the headphone plug into the front panel jack will cut off the external speaker, as well as the internal speaker.

If you are using a footswitch for PTT control, the lead from the footswitch may be connected to pin 4 of the rear panel ACC jack. Use pin 3 for the common connection.

FP-707/FT-707/YM-35/ FC-707/FV-707DM

POWER SUPPLY FP-707

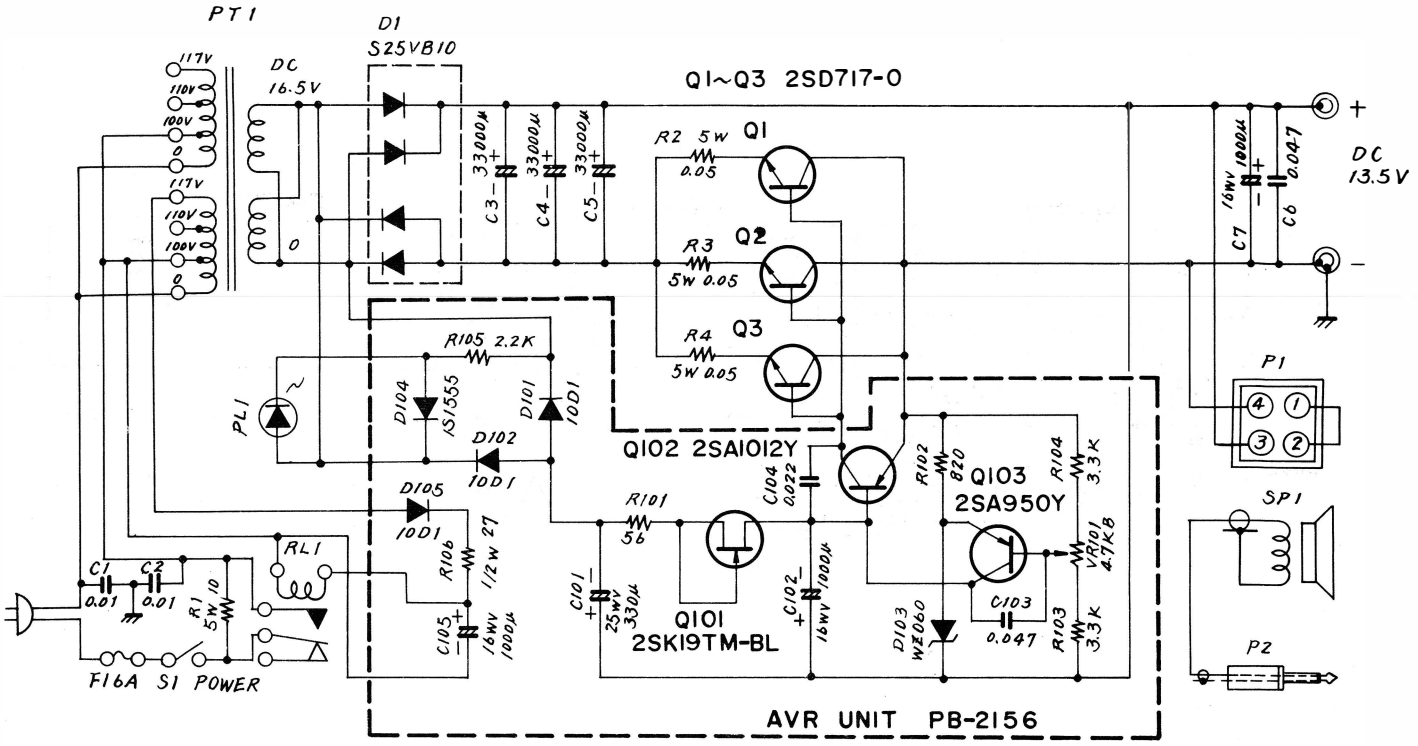

FP-707 CIRCUIT DIAGRAM

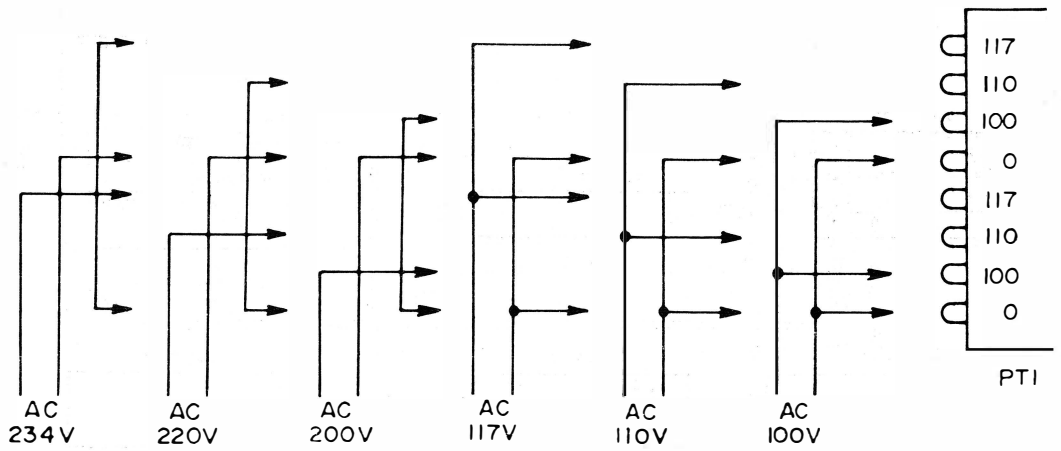

FP-707 POWER TRANSFORMER PRIMARY CONNECTIONS

INTERCONNECTIONS

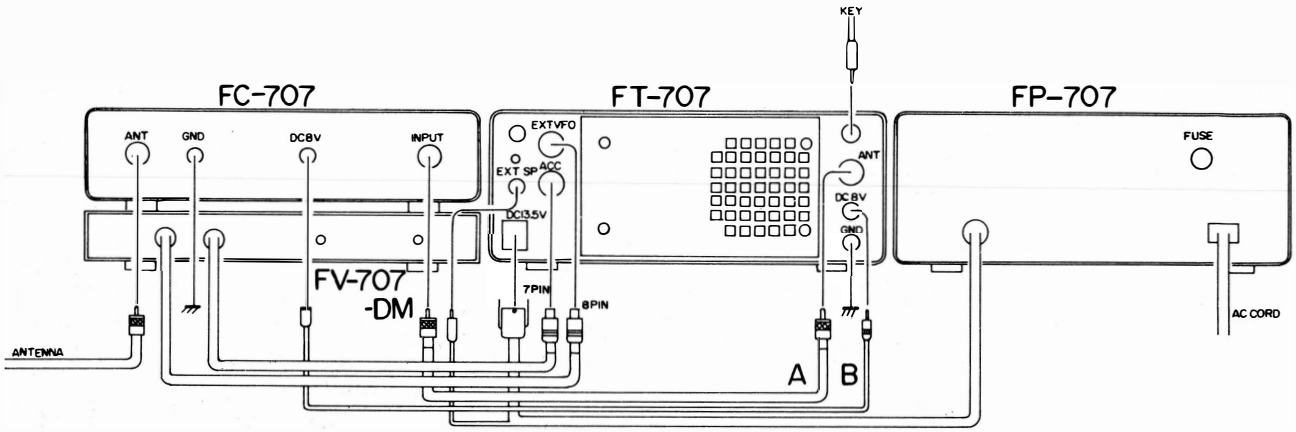

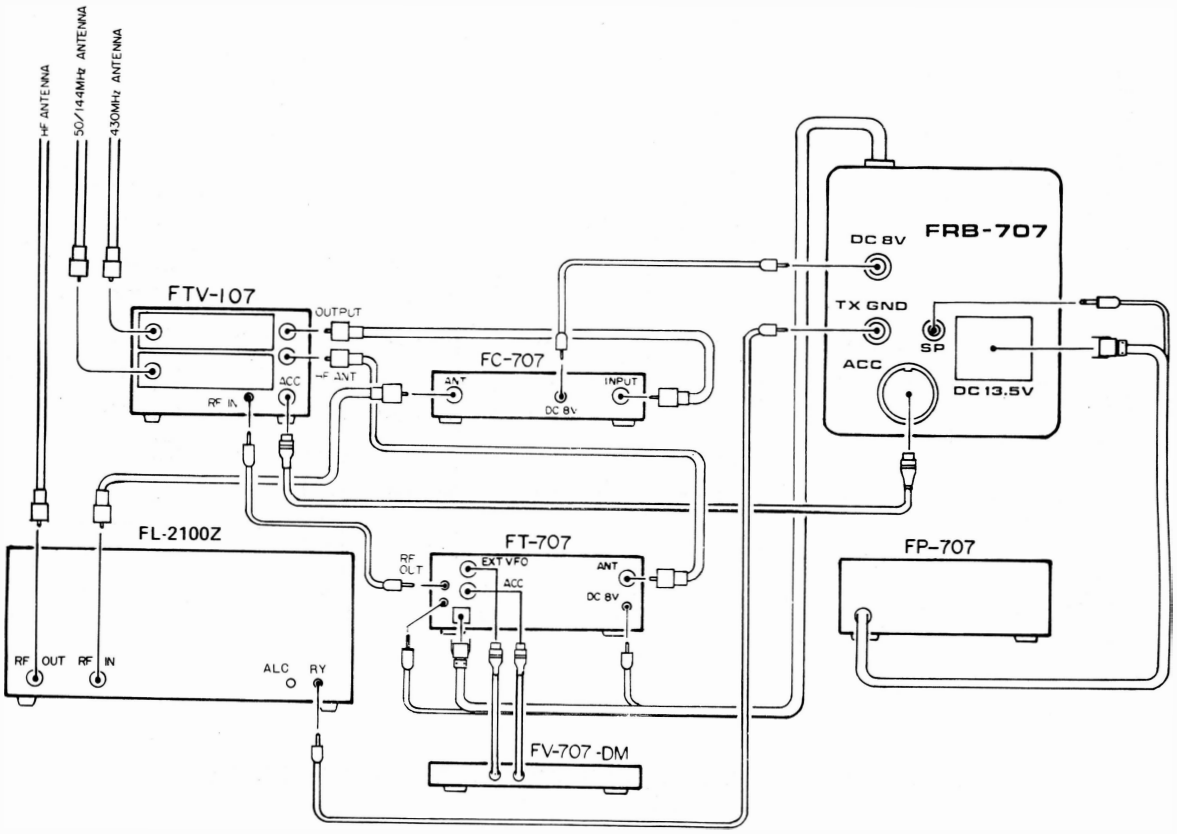

RELAY BOX FRB-707

The FRB-707 Relay Box is designed for the interconnection of the FT-707 with either the FL-2100Z linear amplifier or the FTV-107R transverter. For the connection of the FT-707 series using the FRB-707 Relay Box, please refer to the figure below:

FTV-107R

When the FTV-107R is connected to the FT-707 with the FRB-707 Relay box, the TX/RX control line from the transverter is controlled by the relay box, and while the transverter is activated, the power line for the final amplifier in the FT-707 is switched off.

FC-707 + FTV-107R

When the FC-707 and FTV-107R are connected to the FT-707, the required +8V is supplied through this relay box, whenever the FTV-107R transverter is on.

FL-2100Z (Not available in USA)

When connecting the FL-2100Z linear amplifier, the TX-GND line should be connected to ground when the FT-707 is transmitting.

NOTE: The FT-707 transceiver does not have an external ALC input terminal. Therefore, carefully adjust the CAR control so as not to exceed 500 mA on the IC meter of the FL-2100Z. For SSB mode, 300 mA is acceptable (at voice peaks, the deflection may be 500 mA). During AM mode, adjust the carrier control so as not to exceed 200 mA. For further details regarding proper operation, please refer to the Instruction Manuals for both the FT-707 and FL-2100Z.

FRB-707

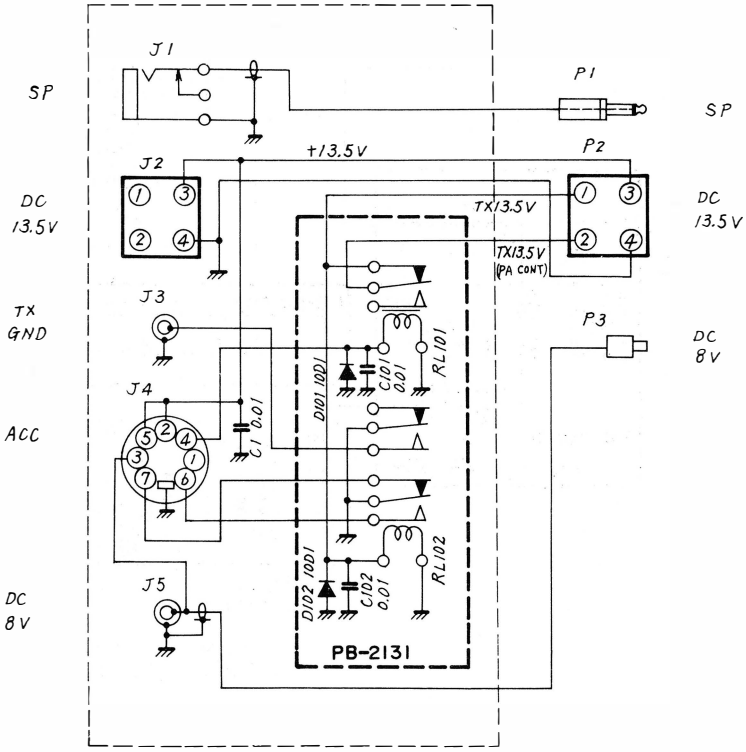

ANTENNA TUNER FC-707

FC-707

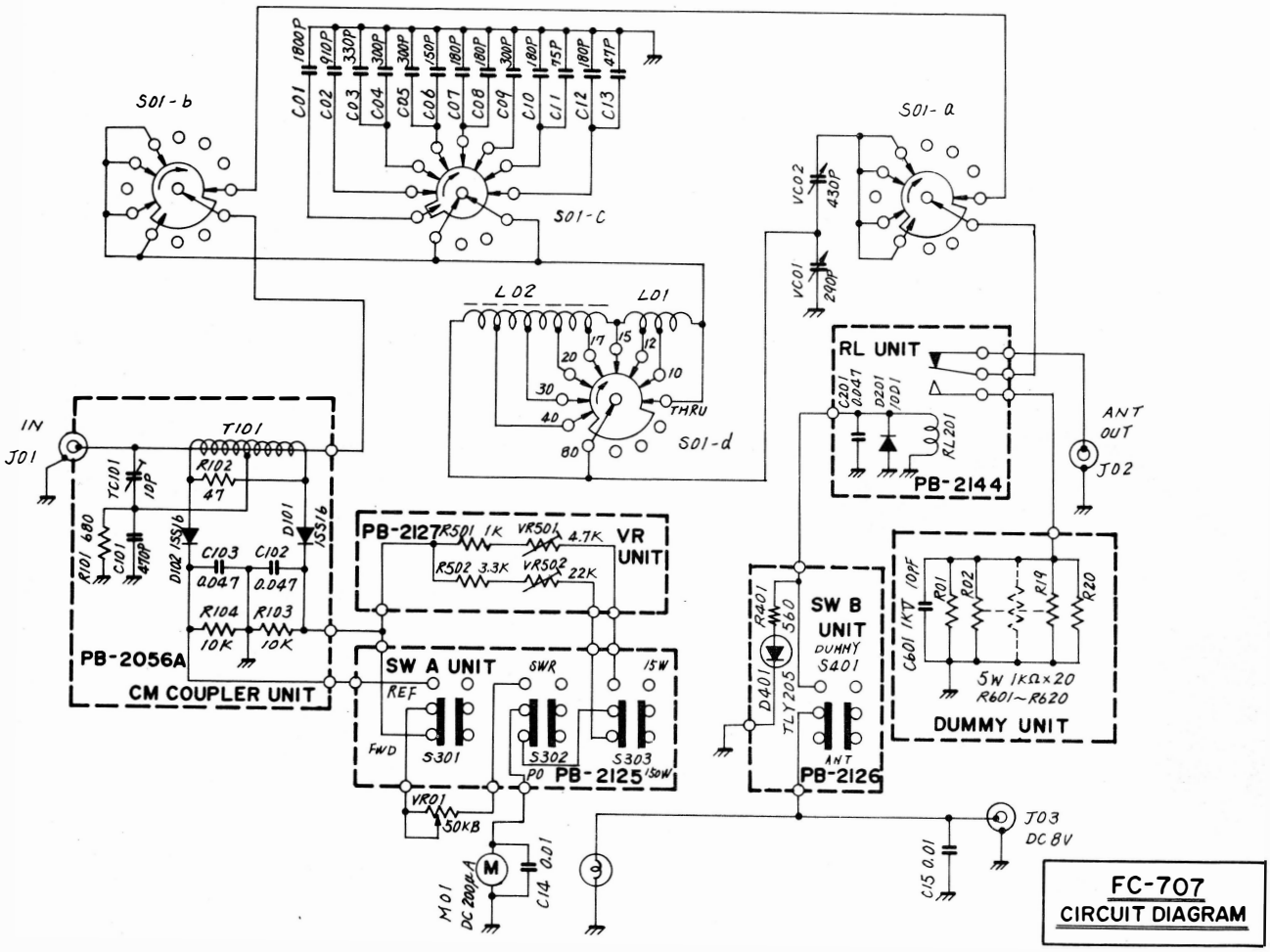

OPERATION

The all solid state design of the FT-707 means that tuning procedures are minimal. However, care should be exercised in operation to ensure that spurious signals are not generated by an improperly-adjusted transmitter. The following paragraphs will describe the tuning procedure for receiver and transmitter operation.

INITIAL CHECK

Before turning the transceiver on, confirm once again that all interconnections, power supply voltages, and fuses are correct.

FREQUENCY DETERMINATION

Frequency display on the FT-707 is by means of digital as well as analog display. The digital display is a true frequency counter, so no recalibration is required when changing bands.

The analog display may be aligned by direct comparison to the digital display. Note that the lower band edge of the 40, 30, 20, 17, 15, and 10 meter A and C bands corresponds to a starting frequency of 000 (e.g. 14.000 MHz) on the dial. On the 80, 12, and 10 meter B and D bands, the lower band edge begins at 500 (e.g. 3.500 MHz).

RECEIVE OPERATION

(1) Preset the controls and switches as follows:

MODE	Desired mode
AF GAIN	Adjust subsequently for a comfortable level
RF GAIN	Fully clockwise
WIDTH	12 o'clock position
BAND	Desired band
DIAL	Desired frequency
SELECT switches	All should be off initially

(2) Be certain that a 50 ohm antenna or dummy load is connected to the antenna jack.

(3) Set the transceiver POWER switch to ON. If you are using the FP-707 AC Power Supply, slip the FP-707 power switch on first, then turn on the transceiver.

(4) Adjust the AF GAIN control for a comfortable volume level. The frequency will be displayed on the digital display, and you may adjust the main dial for the desired operating frequency. Note that all receiver preselector networks are preset for each band, and no adjustment is required for peak performance.

(5) When pulse-type noise is encountered, push the NB (Noise Blanker) switch. While no noise blanker will eliminate all types of noise (such as atmospheric or cosmic noise), the FT-707 noise blanker is a state-of-the-art design which should effectively eliminate most types of automotive ignition noise.

(6) The WIDTH control may be used to adjust the width of the IF passband. In the receiver IF, two 8 pole SSB filters are used. The signal frequency at one of the filters is varied, using a mixing technique that produces no change in the beat tone of the incoming signal.

The WIDTH control is especially useful in eliminating high-pitched "buckshot" on SSB, but it may also be used effectively on CW as well: for example, if the 350 Hz optional CW filter is used, the WIDTH control may be used in the CW-W position to provide an intermediate bandwidth (e.g. 800 Hz). You may then switch between the 800 Hz bandwidth (CW-W) or 350 Hz bandwidth (CW-N) by appropriate setting of the MODE switch.

(7) If the station you are working begins to drift, push the CLAR select switch to activate the clarifier control. You may then follow the drifting signal, up to a maximum of ±3 kHz.

TRANSMITTER OPERATION

The discussion of the operation of the transmitter will be on a mode-by-mode basis.

It is important that an antenna or 50 ohm dummy load be connected to the antenna jack at all times.

Never switch any of the front panel switches (BAND, MODE, SELECT, etc.) while transmitting. It is possible to damage this equipment by ignoring this simple precaution.

Never transmit "key down" for more than 30 seconds at a time. If you transmit for 30 seconds, we recommend a rest period of at least two minutes before the next transmission. The final amplifier contains a heat sensing protection system, which will reduce the power output if the temperature of the final transistors becomes too high.

SSB MODE

(1) Preset the controls and switches as follows:

MODE . . . . . Desired mode, LSB or USB
ALC. . . . . ON (switch pushed)
MIC GAIN . . Set to the 10 o'clock position
CAR. . . . . Fully counterclockwise

(2) Close the microphone PTT switch.

(3) Speak in a normal voice into the microphone, and note the reading on the level meter. On voice peaks, the ALC indication should not illuminate any of the yellow LEDs. If the LEDs become consistently illuminated, retard the setting of the MIC GAIN control.

(4) If you push the ALC switch again, the relative PO meter will be activated. In this case, 5 LEDs should become illuminated on voice peaks.

(5) Release the PTT switch for receiver recovery.

(6) For VOX operation, advance the front panel VOX control until your voice activates the transmitter (PTT switch released). You may then adjust the front panel DELAY control to obtain the desired relay hang time. If the speaker output activates the VOX, you may have the VOX control advanced too far. Otherwise, the ANTITRIP control inside the cabinet may require adjustment; see the "Maintenance and Alignment" section of this manual for details.

CW MODE

(1) Set the MODE switch to CW-W or CW-N, and set the VOX control fully counterclockwise. Insert your key lead into the rear panel KEY jack.

(2) Push the front panel MOX switch (or close your footswitch, if used), and close your key. The sidetone will be heard in the speaker. Advance the CAR control until the desired power level is obtained. Maximum power output occurs when 8 LEDs are lit up.

(3) To adjust the CW semi-break-in circuit, advance the VOX control so that the CW sidetone activates the transmitter when you close your key. Adjust the DELAY control to provide the desired relay hang time.

(4) For QRP operation, the CAR control will provide adjustment of the power output level, down to 10 watts. An in-line wattmeter may be used for precise power measurement.

(5) When the 600 Hz or 350 Hz CW filter is installed, set the MODE switch to CW-N (narrow) to select the 6 pole CW filter. When the MODE switch is set to CW-W, the SSB filter will be selected. As noted earlier in this chapter, it is possible to use the WIDTH control to good advantage in providing a variety of bandwidths in the CW-W position.

AM MODE

(1) Set the MODE switch to AM, the ALC switch OFF, and rotate the MIC GAIN and CAR controls fully counterclockwise.

(2) Close the PTT switch, and advance the CAR control until 4 LEDs light up.

(3) Set the ALC switch ON, and speak into the microphone in a normal voice, and advance the MIC GAIN control until the first LED lights up dimly.

SECTION 2 — TECHNICAL NOTES

SIGNAL TRACING IN THE FT-707 2-1
RX FREQUENCY RELATIONSHIPS 2-6
CRYSTAL DATA 2-6
TX CONTROL LINE CIRCUIT 2-7
CIRCUIT DESCRIPTION 2-8

SSB/CW MODE RX

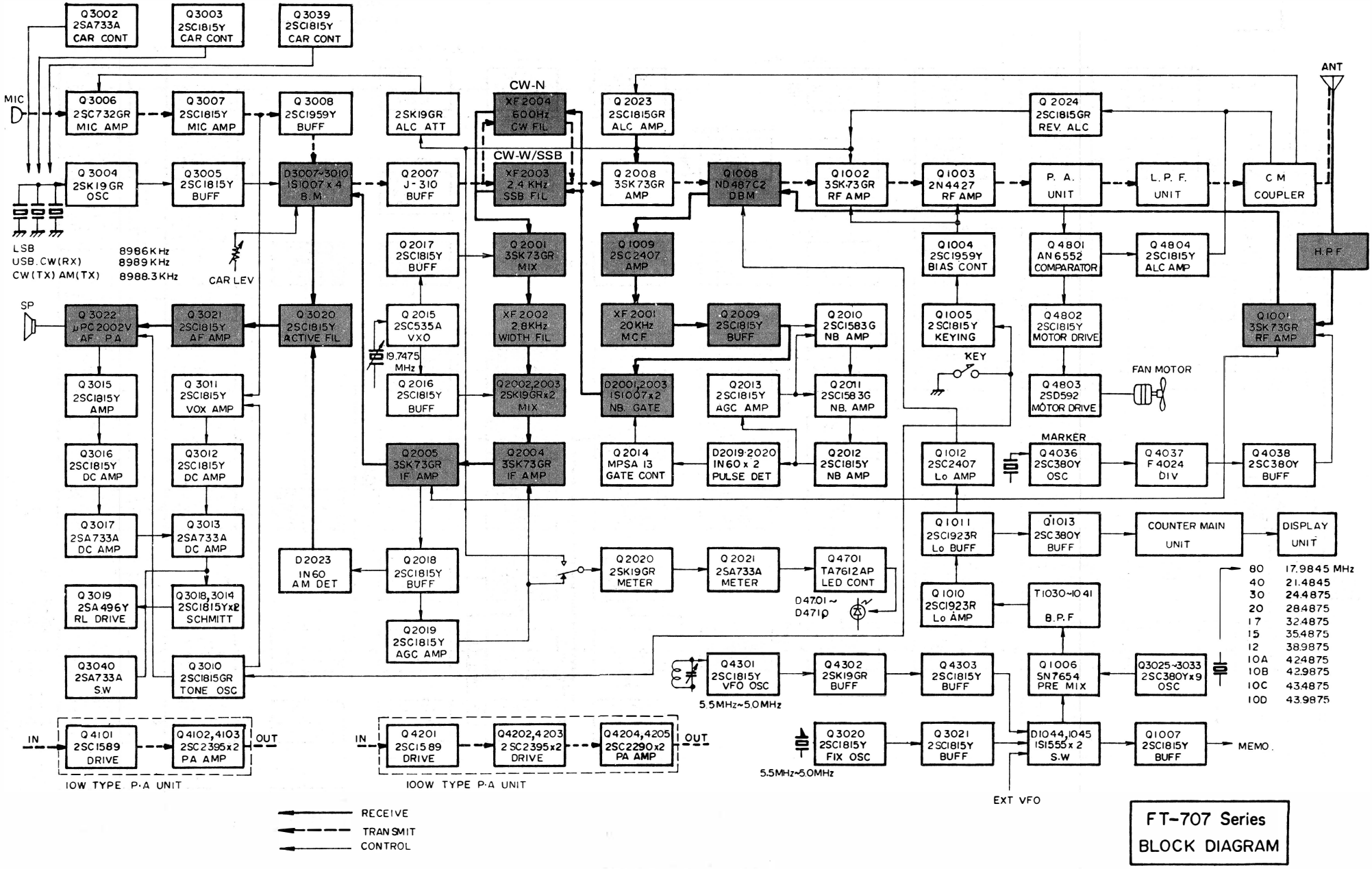

FT-707 Series
BLOCK DIAGRAM

AM MODE RX

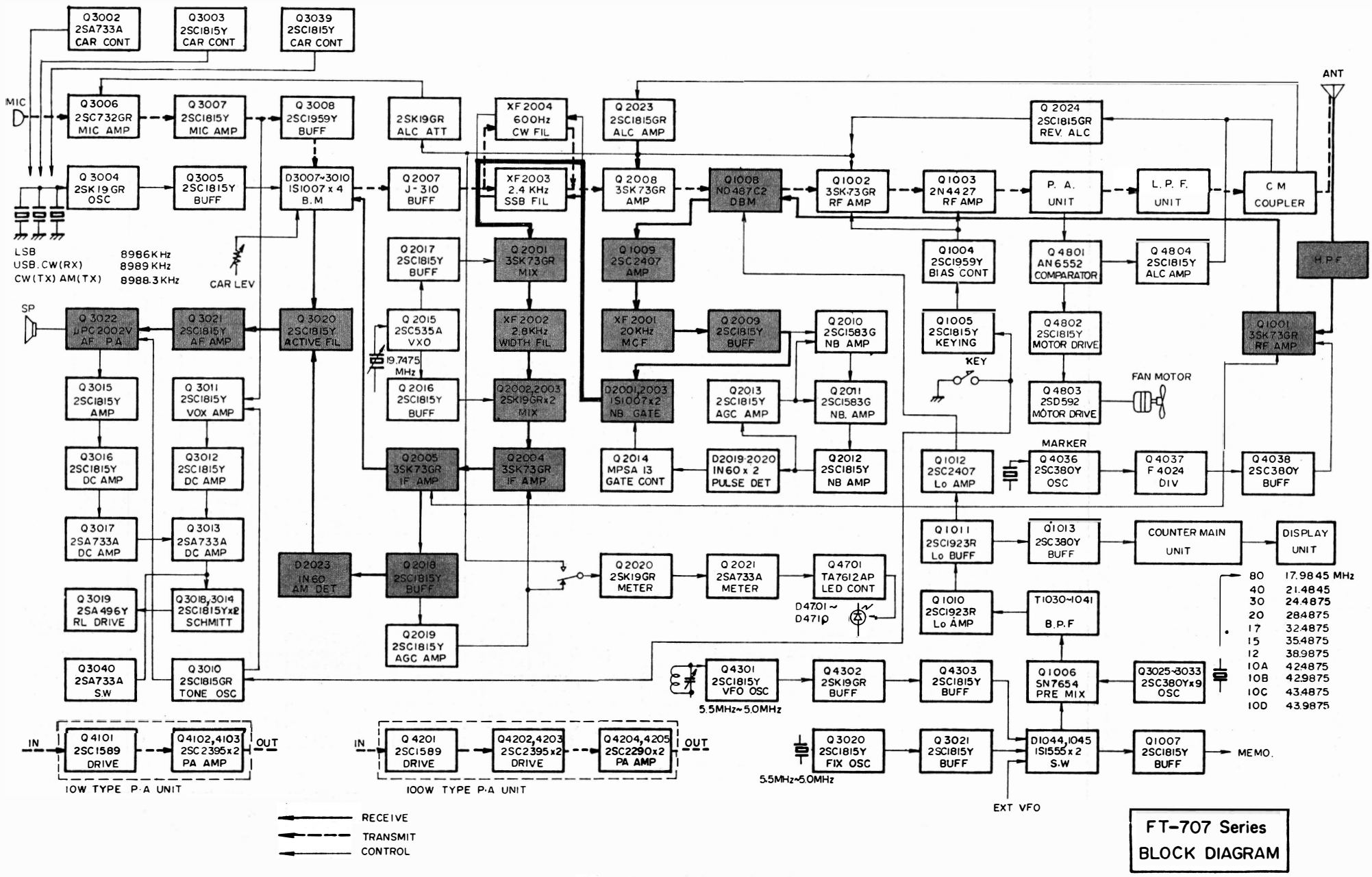

FT-707 Series
BLOCK DIAGRAM

SSB MODE TX

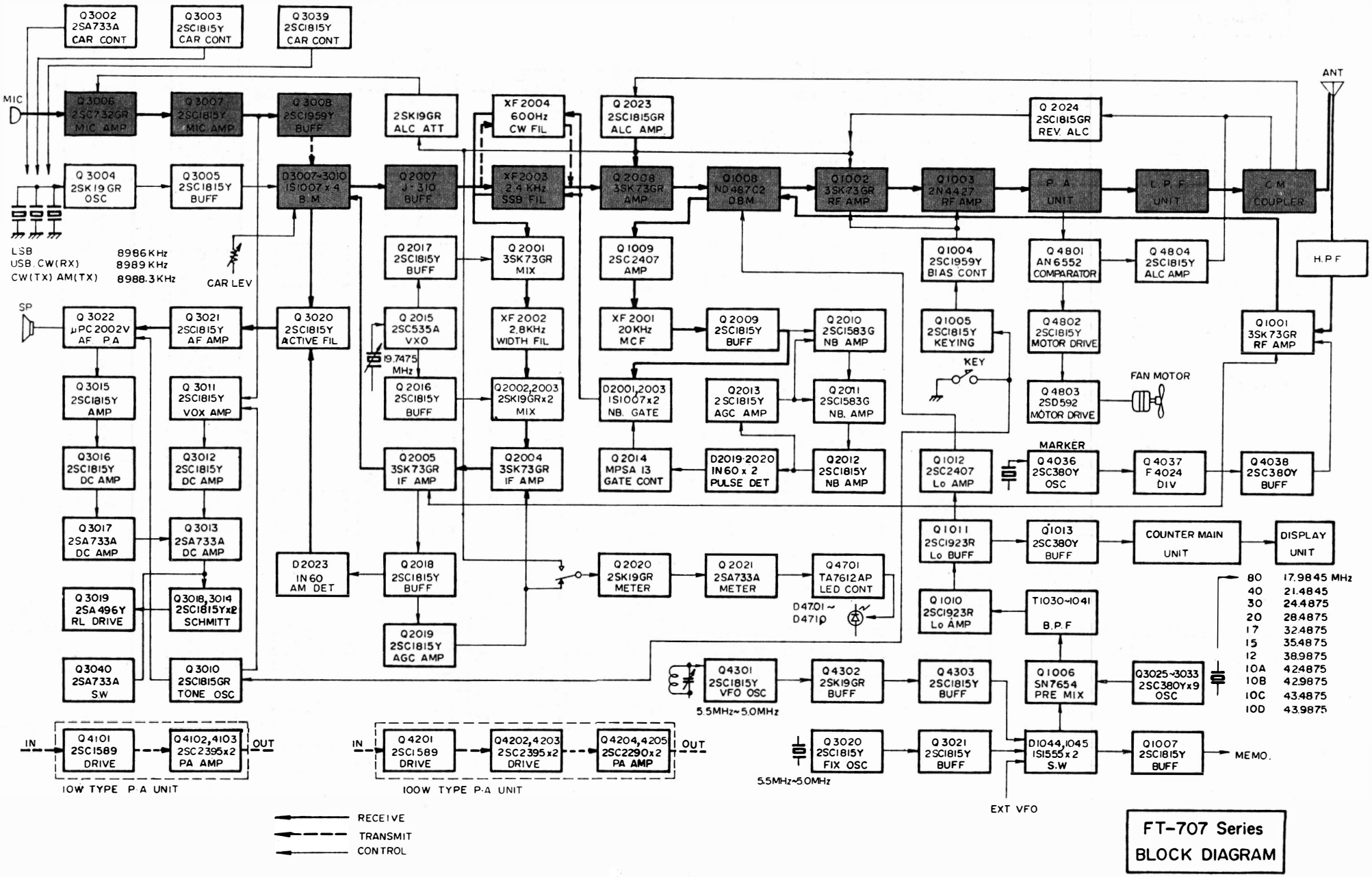

FT-707 Series
BLOCK DIAGRAM

CW MODE TX

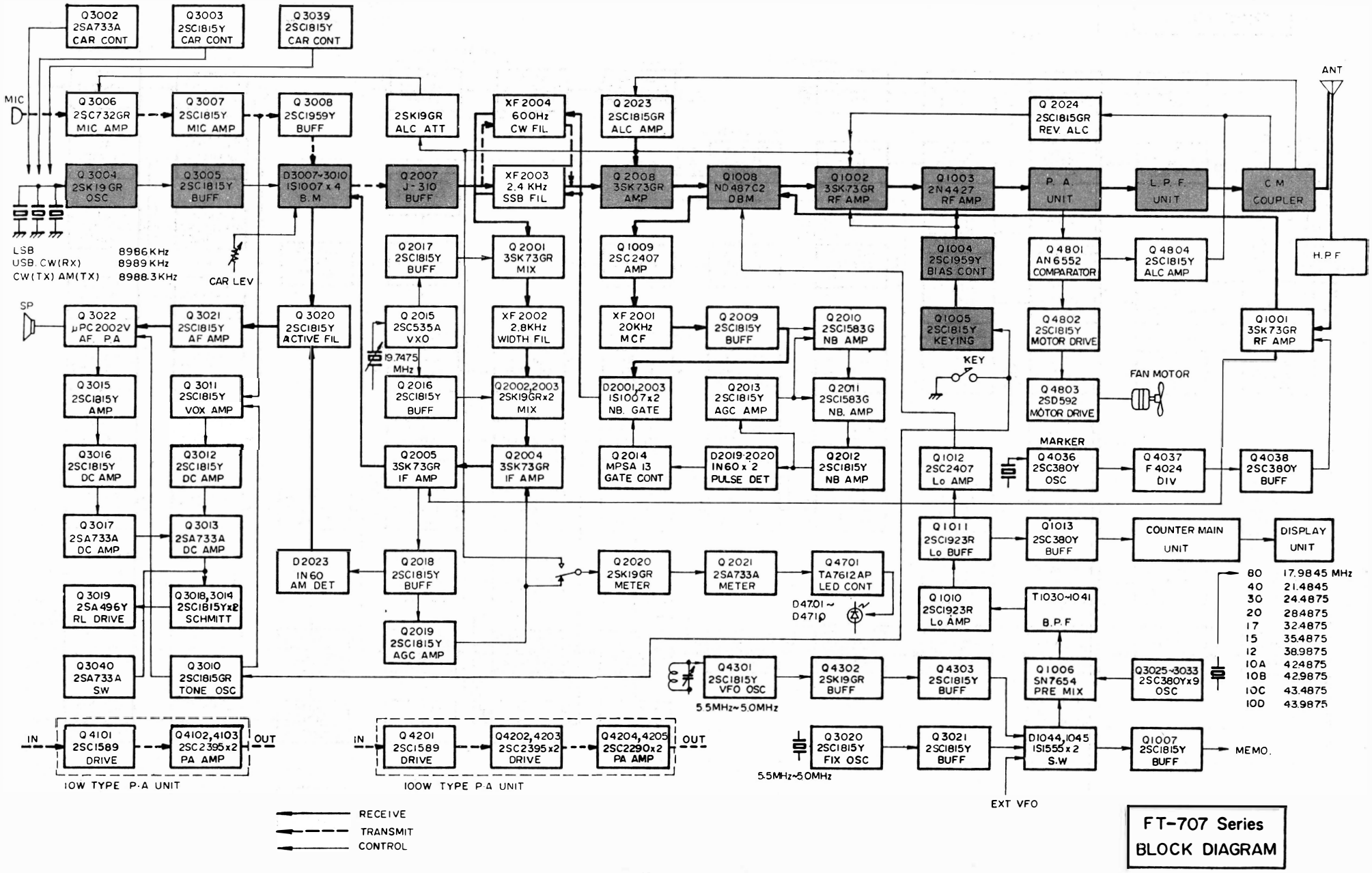

FT-707 Series
BLOCK DIAGRAM

AM MODE TX

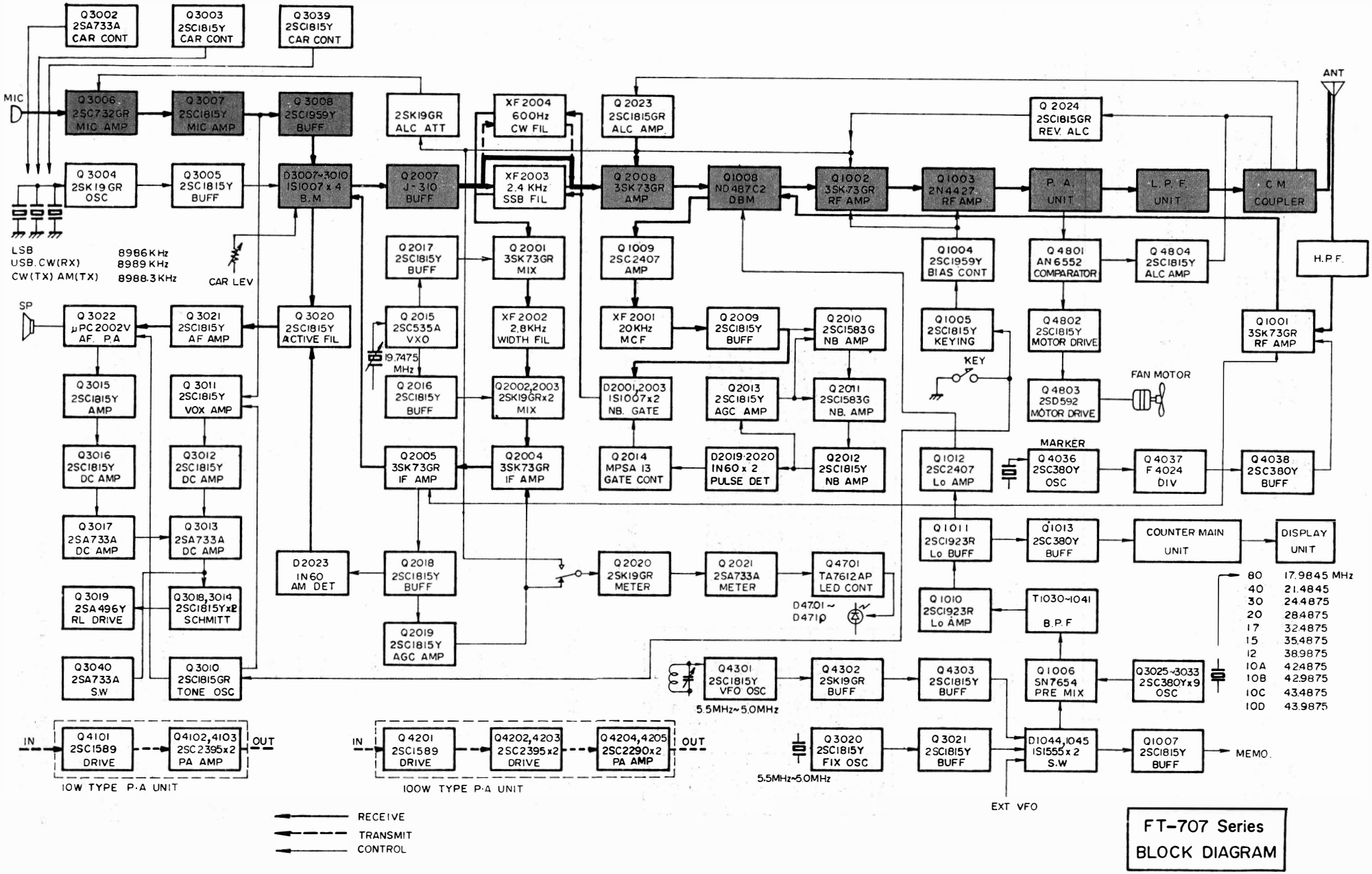

FT-707 Series
BLOCK DIAGRAM

RX FREQUENCY RELATIONSHIPS

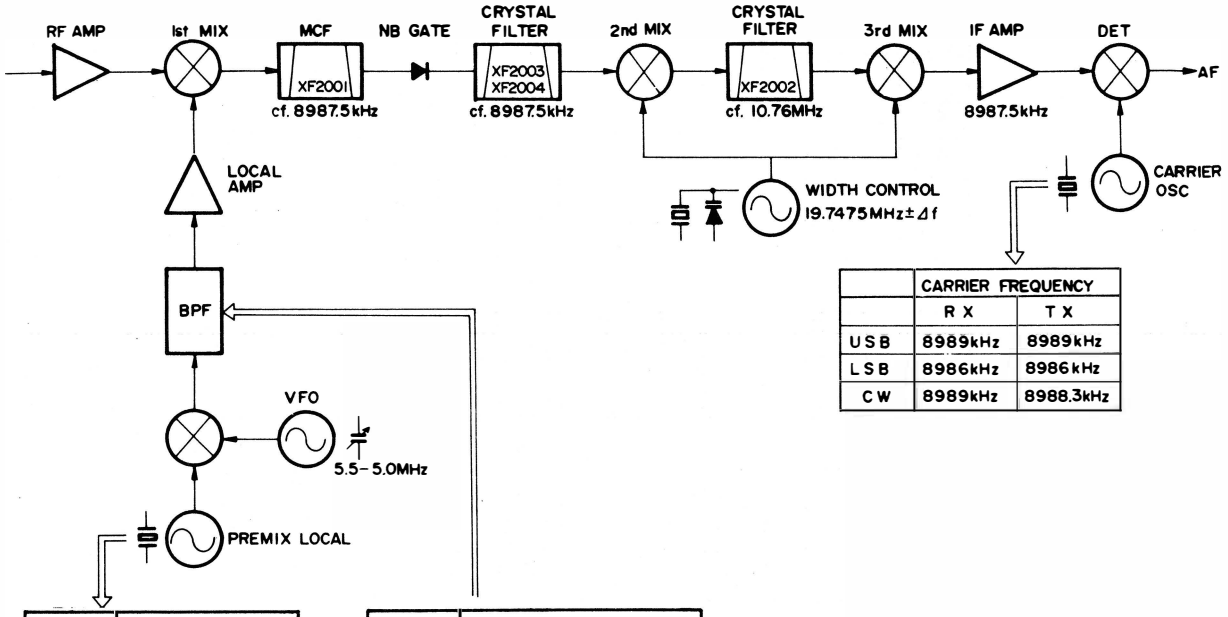

	CARRIER FREQUENCY	
	RX	TX
USB	8989kHz	8989kHz
LSB	8986kHz	8986kHz
CW	8989kHz	8988.3kHz

BAND	FREQUENCY
80m	17.9845MHz
40m	21.4845MHz
30m	24.4875MHz
20m	28.4875MHz
17m	32.4875MHz
15m	35.4875MHz
12m	38.9875MHz
10mA	42.4875MHz
10mB	42.9875MHz
10mC	43.4875MHz
10mD	43.9875MHz

BAND	RANGE
80m	12.4875 — 12.9875MHz
40m	15.9875 — 16.4875MHz
30m	18.9875 — 19.4875MHz
20m	22.9875 — 23.4875MHz
17m	26.9875 — 27.4875MHz
15m	29.9875 — 30.4875MHz
12m	33.4875 — 33.9875MHz
10m	36.9875 — 38.9875MHz

CRYSTAL DATA:FT-707

UNIT	FUNCTION	HOLDER	FREQUENCY (kHz)	MODE	LOAD C (pF)	EFFECTIVE RESISTANCE (ohms)	DRIVE LEVEL (mw)
LOCAL	160m	HC-18/U	15984.5	3rd overtone	20	80	2
	80m	〃	17984.5	〃	〃	60	〃
	40m	〃	21484.5	〃	〃	45	〃
	30m	〃	24487.5	〃	〃	40	〃
	20m	〃	28487.5	〃	〃	40	〃
	17m	〃	32487.5	〃	〃	40	〃
	15m	〃	35487.5	〃	〃	40	〃
	12m	〃	38987.5	〃	〃	40	〃
	10m(A)	〃	42487.5	〃	〃	40	〃
	10m(B)	〃	42987.5	〃	〃	40	〃
	10m(C)	〃	43487.5	〃	〃	40	〃
	10m(D)	〃	43987.5	〃	〃	40	〃
AF	LSB	〃	8986.0	Fundamental	30	35	10
	USB	〃	8989.0	〃	〃	〃	〃
	CW, AM	〃	8988.3	〃	〃	〃	〃
FILTER	Width	〃	※19747.5	Fundamental	35	15	2
RF	Marker	HC-6/W	3200.0	Fundamental	23	50	5
LSI COUNTER	Clock	HC-18/U	6553.6	Fundamental	30	30	2

※XCO FREQUENCY: 19743—19753kHz
Determined by circuit

TX CONTROL LINE CIRCUIT

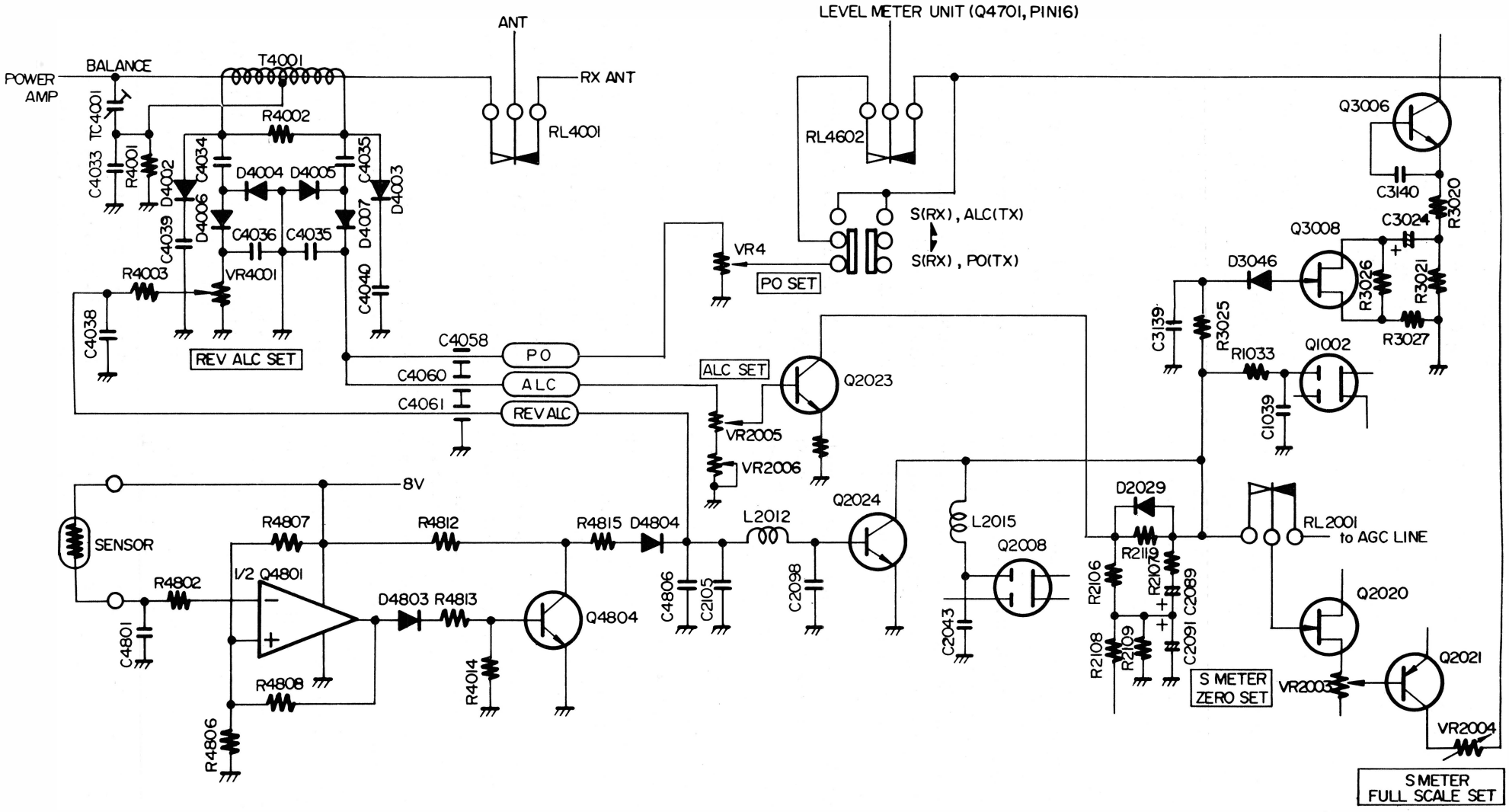

CIRCUIT DESCRIPTION

The block diagram and circuit description to follow, will provide you with a better understanding of this transceiver. Please refer to the schematic diagram for specific component details.

RECEIVER

The RF input signal from the antenna is fed through relay RL_{4001} (LPF Unit), lamp fuse F_{4801} (FAN MOTOR Unit), and passed through a high-pass filter of $f_C = 1.7$ MHz on the FAN MOTOR Unit. The signal is then delivered to pin 1 of J_{1002} on the RF Unit.

The signal is passed through individual antenna coils for each band and a 9 MHz trap, and amplified by Q_{1001} **(3SK73GR)**, a dual gate MOS FET with excellent rejection of cross modulation and intermodulation. The amplified signal is fed through diode switched bandpass filter networks, which protect the mixer from out-of-band signals.

The RF signal is fed to the Schottky barrier diode ring module, Q_{1008} **(ND487C2-3R)**, where the RF signal is mixed with a local signal delivered from Q_{1012} **(2SC2407)**, resulting in a first IF of 8.9875 MHz. The input and output of the diode ring are protected by 50 ohm attenuators, which stabilize the input and output terminations for optimum intercept characteristics. The IF signal is then amplified by mixer post-amp Q_{1009} **(2SC2407)** and fed to pin 5 of J_{1001} for delivery to the IF Unit.

The local signal for the mixer is derived in the following manner: the incoming VFO signal from the VFO Unit is mixed with a crystal controlled local signal from the AF Unit at Q_{1006} **(SN76514N)** and fed through bandpass filter networks for each band, which remove any spurious responses outside of the desired band. The signal is then amplified by Q_{1011}, Q_{1012} **(2SC1923R)**, and Q_{1012} **(2SC2407)** and fed to the LO port of the diode ring. The premix local signal is generated by Q_{3025} –Q_{3033} **(2SC380TMY)**, located on the AF Unit.

The 8.9875 MHz IF signal is fed to pin 5 of J_{2001}. The signal is passed through XF_{2001}, a 20 kHz monolythic crystal filter which provides early protection against IMD while allowing enough bandwidth and delay time to match the noise blanker gate pulses. The signal then passes through noise blanker diodes D_{2001} and D_{2003}, which act as a switch driven by noise blanker controller Q_{2014} **(MPSA13)**. The IF signal then is fed through the main SSB or CW filter (CW filter optional); on AM, the signal passes around the SSB/CW filter.

The filtered IF signal is delivered to mixer Q_{2001} **(3SK73GR)**, where the 8.9875 MHz IF signal is mixed with a 19.7475 MHz $\pm\Delta f$ local signal delivered from oscillator Q_{2015} **(2SC535A)** and buffer Q_{2016} **(2SC1815Y)**. The resulting 10.76 MHz signal is fed through crystal filter XF_{2002}, then fed to mixer Q_{2002}/Q_{2003} **(2SK19GR)**, where the 10.76 MHz signal is mixed with an identical 19.7475 MHz $\pm\Delta f$ signal fed from buffer Q_{2017} **(2SC1815Y)**, resulting in an 8.9875 MHz signal, the same as the original IF. This process varies the IF across the passband of crystal filter XF_{2002}, resulting in continuously variable width of the IF passband with no change in the beat note of the incoming signal.

The IF signal is then amplified by Q_{2004} and Q_{2005} **(3SK73GR)**, the main IF amplifiers, and delivered to pin 2 of J_{2002} for delivery to the AF Unit.

A portion of the output from Q_{2005} is fed to buffer Q_{2018} **(2SC1815Y)** and detected by D_{2024} and D_{2025} **(1N60)**, resulting in a DC voltage. This voltage is amplified by Q_{2019} **(2SC1815Y)** and fed to gate 2 of the RF and IF amplifiers, providing automatic gain control of those stages. The AGC voltage is also amplified by Q_{2020} **(2SK19GR)** and Q_{2031} **(2SA733A)** for delivery to the front panel LED display for indication of the received signal strength.

When the noise blanker is switched on, a portion of the output from Q_{2009} is amplified by Q_{2010}, Q_{2011} **(2SC1583G)** and Q_{2012} **(2SC1815Y)**. When a carrier or noise-free modulated signal is received, the IF signal is rectified by D_{2017} and D_{2018} **(1N60)**, producing a DC voltage. This DC voltage is amplified by Q_{2013} **(2SC1815Y)**, which charges C_{2063} for AGC purposes. The AGC voltage is used to control the gain of Q_{2010} and Q_{2011}.

When impulse-type noise is received, D_{2019} and D_{2020} **(1N60)** rectify the IF signal, which controls the noise blanker switch, Q_{2014}.

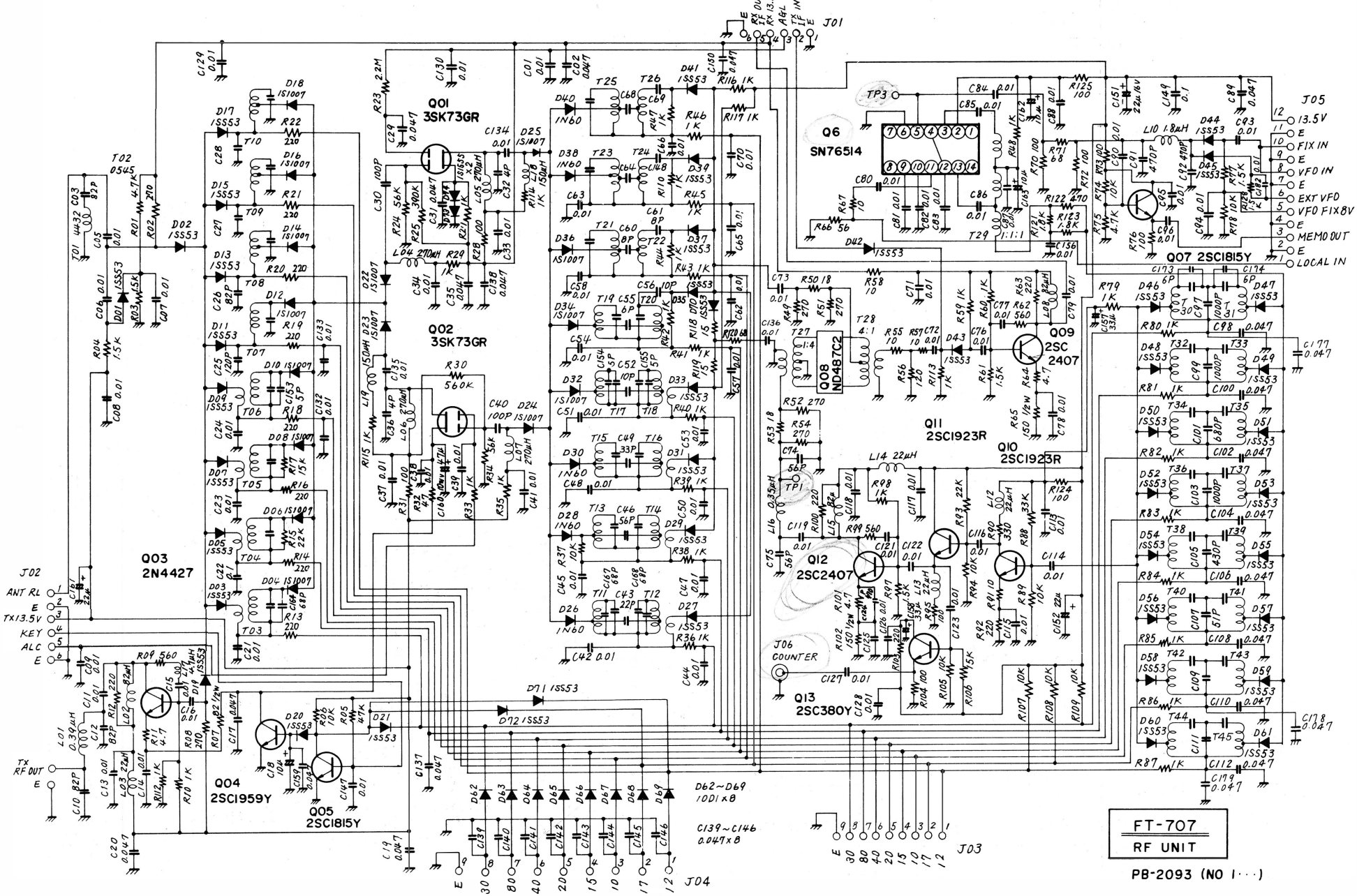
FT-707
RF UNIT
PB-2093 (NO 1···)
Q01 3SK73GR
Q02 3SK73GR
Q03 2N4427
Q04 2SC1959Y
Q05 2SC1815Y
Q06 SN76514
Q07 2SC1815Y
Q08 ND487C2
Q09 2SC 2407
Q10 2SC1923R
Q11 2SC1923R
Q12 2SC2407
Q13 2SC380Y
J01
J02
J03
J04
J05
J06 COUNTER
ANT RL
TX13.5V
KEY
ALC
TX RF OUT
13.5V
FIX IN
VFO IN
EXT VFO
VFO FIX8V
MEMO OUT
LOCAL IN
D62~D69 1SD1×8
C139~C146 0.047×8

Early model

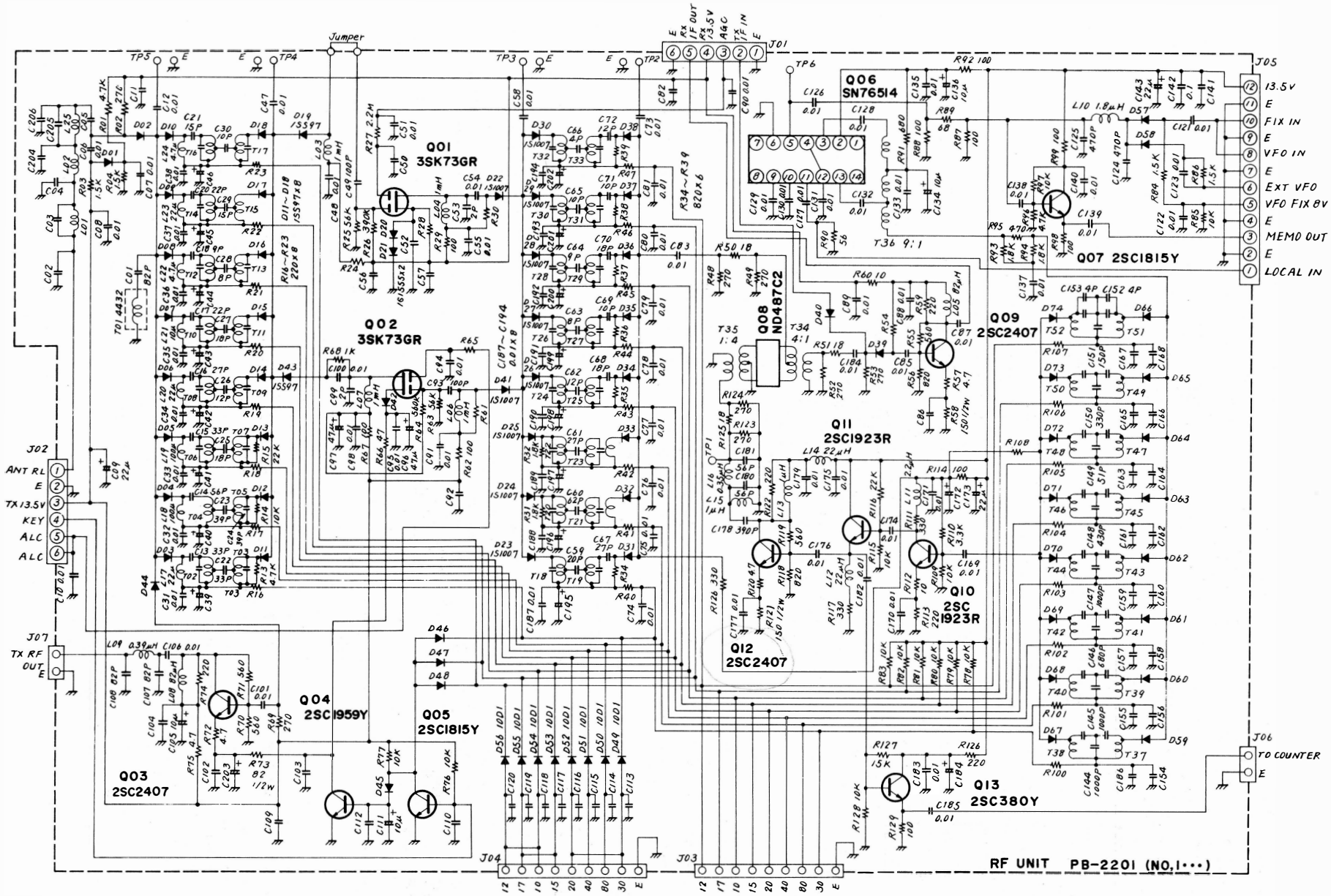

NOTES

1. ALL RESISTORS ARE 1KΩ UNLESS OTHERWISE NOTED
2. ALL CAPACITORS ARE 0.047μF UNLESS OTHERWISE NOTED
3. ALL ELECTOLYTIC CAPACITORS ARE 33μF OTHERWISE NOTED
4. ALL DIODES ARE 1SS53 UNLESS OTHERWISE NOTED

FT-707

RF UNIT

After prod. 11

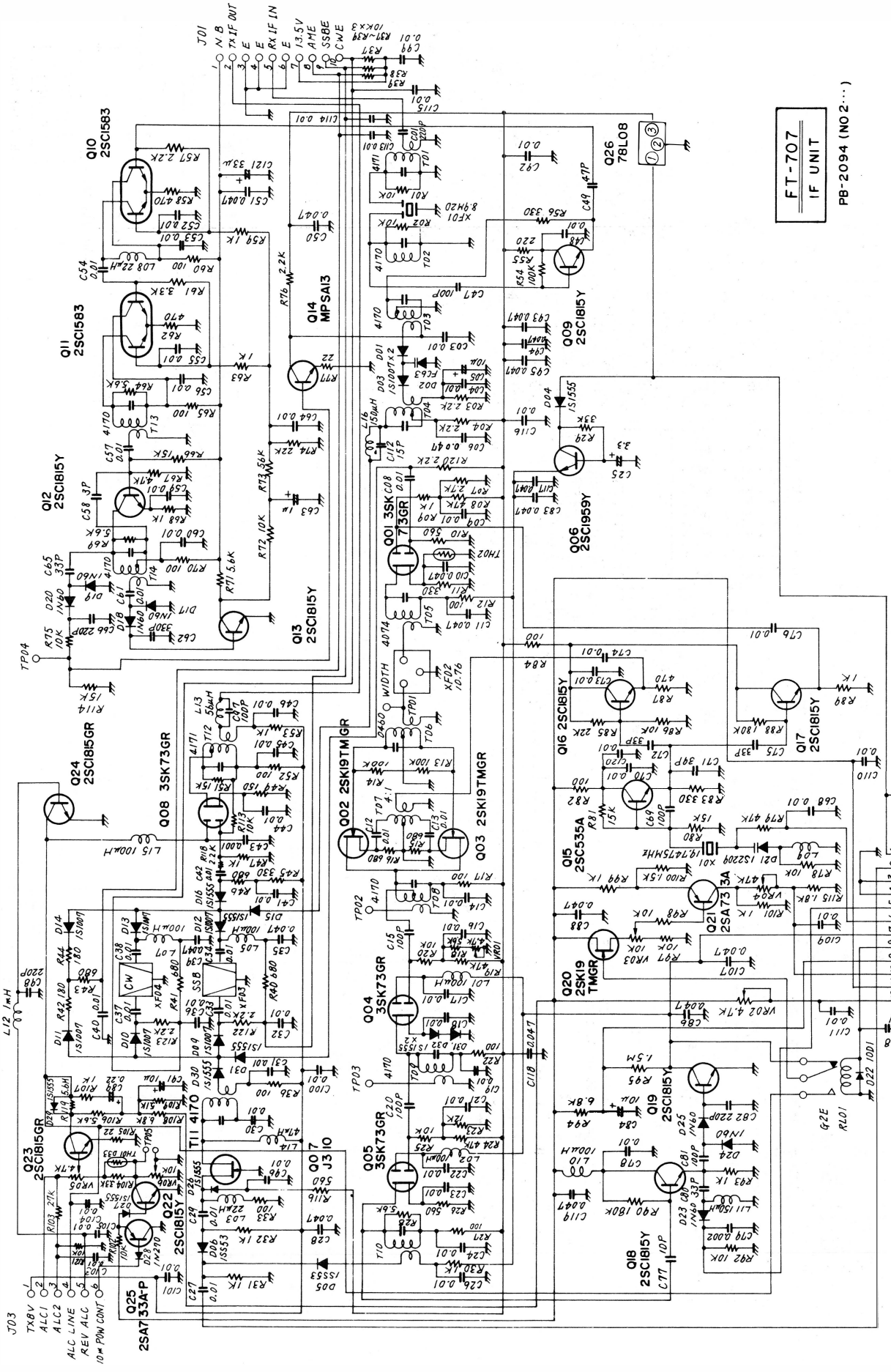
FT-707
IF UNIT
PB-2094 (NO2···)
Q10 2SC1583
Q11 2SC1583
Q12 2SC1815Y
Q13 2SC1815Y
Q14 MPSA13
Q26 78L08
Q09 2SC1815Y
Q01 3SK73GR
Q06 2SC1959Y
Q24 2SC1815GR
Q08 3SK73GR
Q02 2SK19TMGR
Q03 2SK19TMGR
Q16 2SC1815Y
Q17 2SC1815Y
Q15 2SC535A
Q21 2SA733A
Q20 2SK19TMGR
Q04 3SK73GR
Q05 3SK73GR
Q19 2SC1815Y
Q18 2SC1815Y
Q23 2SC1815GR
Q22 2SC1815Y
Q25 2SA733A-P
Q07 J310
T11 4170
J01
J02
J03
TX IF OUT
RX IF IN
13.5V
AME
SSBE
CWE
TX B
ALC1
ALC2
ALC LINE
REV ALC
10K PON CONT
RX 13.5V
BM
AM OUT
WIDTH VR2
AGC LINE
RL CONT
RF GAIN
METER
BV
WIDTH VR1
WIDTH
G2E
RL01

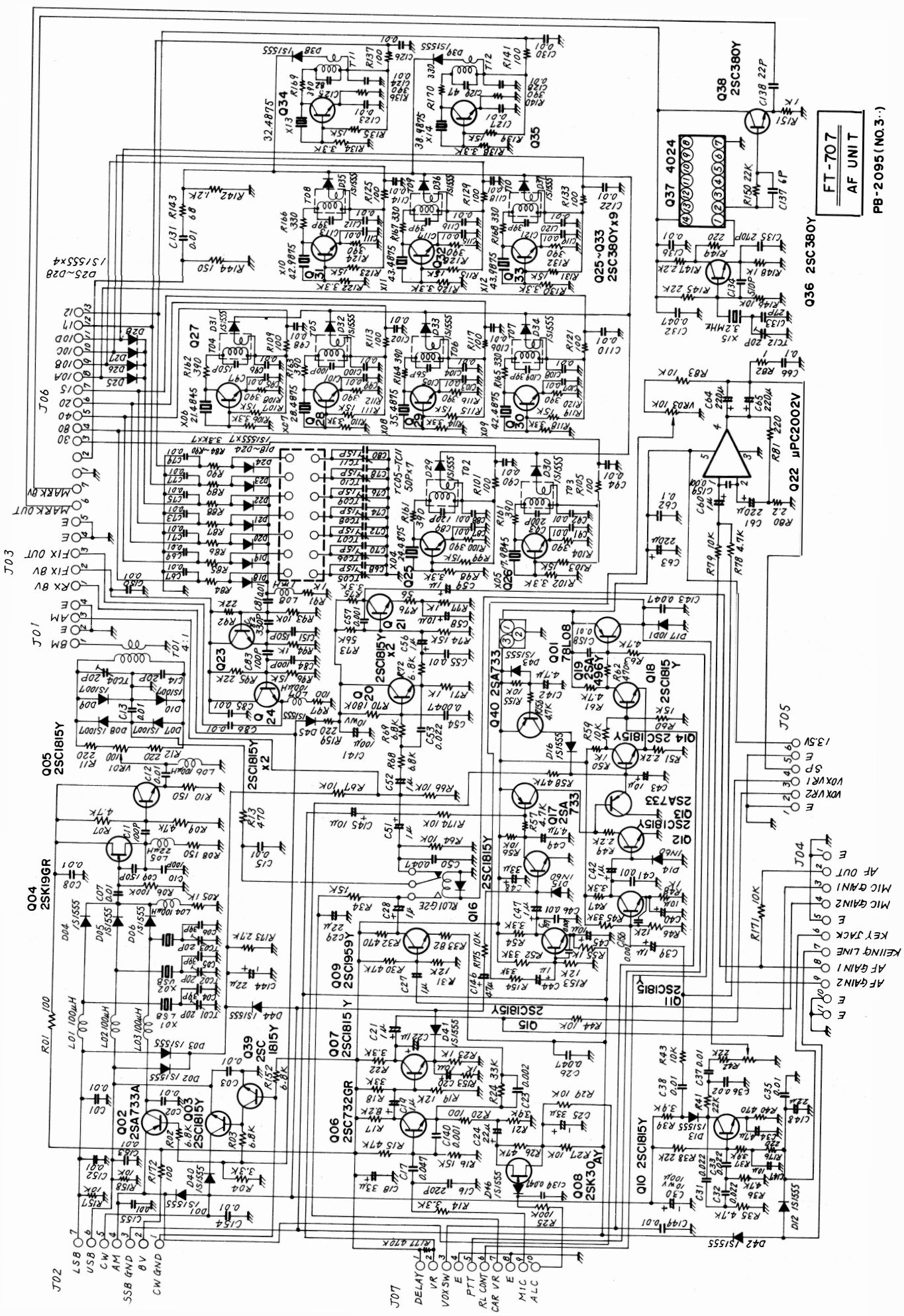
FT-707
AF UNIT
PB-2095(NO.3··)
Q37 4024
Q38 2SC380Y
Q36 2SC380Y
Q25~Q33 2SC380Y×9
Q22 μPC2002V
Q01 78L08
Q04 2SK19GR
Q05 2SC1815Y
Q02 2SA733A
Q03 2SC1815Y
Q39 2SC1815Y
Q07 2SC1815Y
Q06 2SC732GR
Q08 2SK30AY
Q09 2SC1959Y
Q10 2SC1815Y
Q11 2SC1815Y
Q12 2SC1815Y
Q13 2SC1815Y
Q14 2SC1815Y
Q15 2SC1815Y
Q16 2SC1815Y
Q17 2SA733
Q18 2SC1815Y
Q19 2SA496Y
Q40 2SA733
Q20 2SC1815Y ×2
Q21 2SC1815Y ×2
Q23
Q24
Q27
Q28
Q29
Q30
Q31
Q32
Q33
Q34
Q35
D25~D28 1S1555×4
J01
J02
J03
J04
J05
J06
J07
LSB
USB
CW
AM
SSB GND
B V
CW GND
DELAY
VR
VOX SW
E
PTT
RL CONT
CAR VR
MIC
ALC
MARK OUT
MARK BV
FIX OUT
FIX BV
RX BV
AM
BM
13.5V
SP
VOX VR1
VOX VR2
AF OUT
MIC GAIN1
MIC GAIN2
KEY JACK
KEYING LINE
AF GAIN1
AF GAIN2

Noise pulses have a very short duration, but high amplitude. Because of the very short time constant of the C_{2063}/R_{2072} discharge path, AGC voltage is not induced by these short-duration pulses. Therefore, Q_{2010} and Q_{2011} operate at full gain, providing maximum voltage to the base of Q_{2014}. When a pulse is received, therefore, Q_{2014} biases D_{2001} and D_{2003} to block the signal path momentarily. When a desired signal and a noise pulse are received simultaneously, the blanking action is not impaired, because the relative difference between the desired signal and the noise pulse is still high.

In the AM mode, a portion of the output from Q_{2018} is detected by D_{2023} **(1N60)** and delivered to the AF Unit. Filtering in the AM mode is accomplished by XF_{2002}.

AF UNIT (PB-2095)

The SSB or CW signal at pin 1 of J_{3001} is fed through T_{3001} to the diode ring demodulator, $D_{3007}-D_{3010}$ **(1S1007)**, where the IF signal is converted to audio using the carrier signal supplied by crystal oscillator Q_{3004} **(2SK19GR)** and buffer Q_{3005} **(2SC1815Y)**. The carrier oscillator provides signals at the following frequencies:

LSB	8986 kHz
USB/CW(RX)	8989 kHz
CW(TX)/AM(TX)	8988.3 kHz

The audio signal is amplified by Q_{3020} and Q_{3021} **(2SC1815Y)** and fed to final AF amplifier Q_{3022} **(μPC2002V)**, which provides three watts of audio output to the speaker through an output transformerless circuit.

The audio spectrum is shaped by an active low-pass filter at Q_{3020} of f_C = 2.7 kHz, −12 dB/octave.

MARKER GENERATOR

A 25 kHz marker generator is available, for alignment and testing purposes. Marker generator Q_{3036} **(2SC380TMY)** provides a basic 3200 kHz signal, which is divided into 25 kHz multiples by Q_{3037} **(F4024)**, a binary counter. The output signal is fed through buffer Q_{3038} **(2SC380TMY)** to the receiver front end.

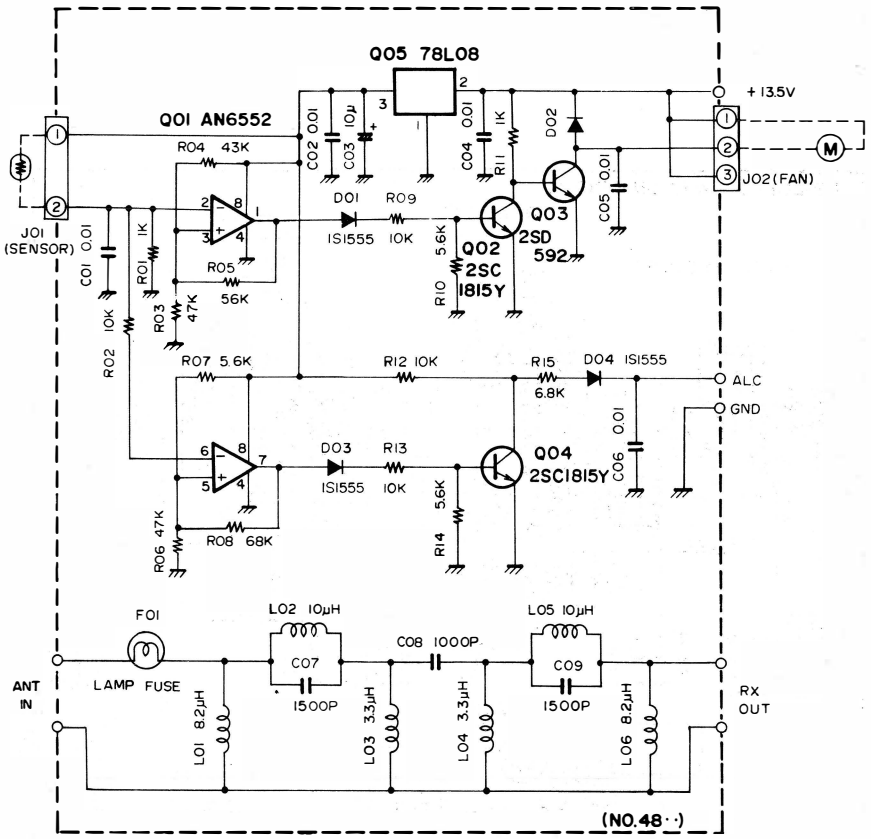

TRANSMITTER

The discussion of the signal flow on transmit will be on a mode-by-mode basis.

SSB

The audio input signal from the microphone jack, J_3, is fed to pin 9 of J_{3007} on the AF Unit. The speech signal is amplified by Q_{3006} **(2SC732GR)** and Q_{3007} **(2SC1815Y)** and then fed through the front panel MIC GAIN control, VR_{3b}. The signal is then applied through buffer Q_{3008} **(2SC1959Y)** to the ring modulator, $D_{3007}-D_{3010}$. Here the audio signal modulates the carrier signal delivered from Q_{3005}, resulting in an 8.9875 MHz double-sideband signal. The signal is then fed to pin 1 of J_{3001} for delivery to the IF Unit.

The IF signal appearing at pin 2 of J_{2002} is fed through buffer Q_{2007} **(J310)** to the SSB filter, where the unwanted sideband is sliced out. The resulting SSB signal is amplified by Q_{2008} **(3SK73GR)** and delivered to the diode ring mixer, Q_{1008}, where the IF signal is mixed with the local signal from the premix circuit. The RF signal is then amplified by Q_{1002} **(3SK73GR)** and Q_{1003} **(2N4427)**, and delivered to the PA Unit.

The input signal is amplified by pre-driver Q_{4201} **(2SC1589)** and the push-pull driver stage, Q_{4202}/Q_{4203} **(2SC2395)**, and amplified further by the push-pull final amplifier, Q_{4202}/Q_{4205} **(2SC2290)**, which provides approximately 100 watts of RF output. The RF signal is fed through bandswitch low-pass filter networks on the LPF Unit, then delivered, through a directional coupler, to the rear panel antenna jack.

CW

For CW, the 8988.3 kHz carrier signal is generated by Q_{3004} and fed through buffer Q_{3005} to the ring modulator, which is unbalanced for CW operation by the application of DC 8V through D_{3001} **(1S1555)** and RL_{3001}. The signal path is then identical to that of the SSB signal, up to the latter stage of the RF Unit.

The key line is connected to the base of Q_{1005} **(2SC1815Y)**. With the key open, Q_{1005} is biased ON, turning bias controller Q_{1004} **(2SC1959Y)** OFF. In this case, the emitters of Q_{1002} and Q_{1003} are open, and no output signal will result. When the key is closed, Q_{1004} will be turned ON, and Q_{1002} and Q_{1003} will be keyed, allowing normal transmission. The key lead is also connected to

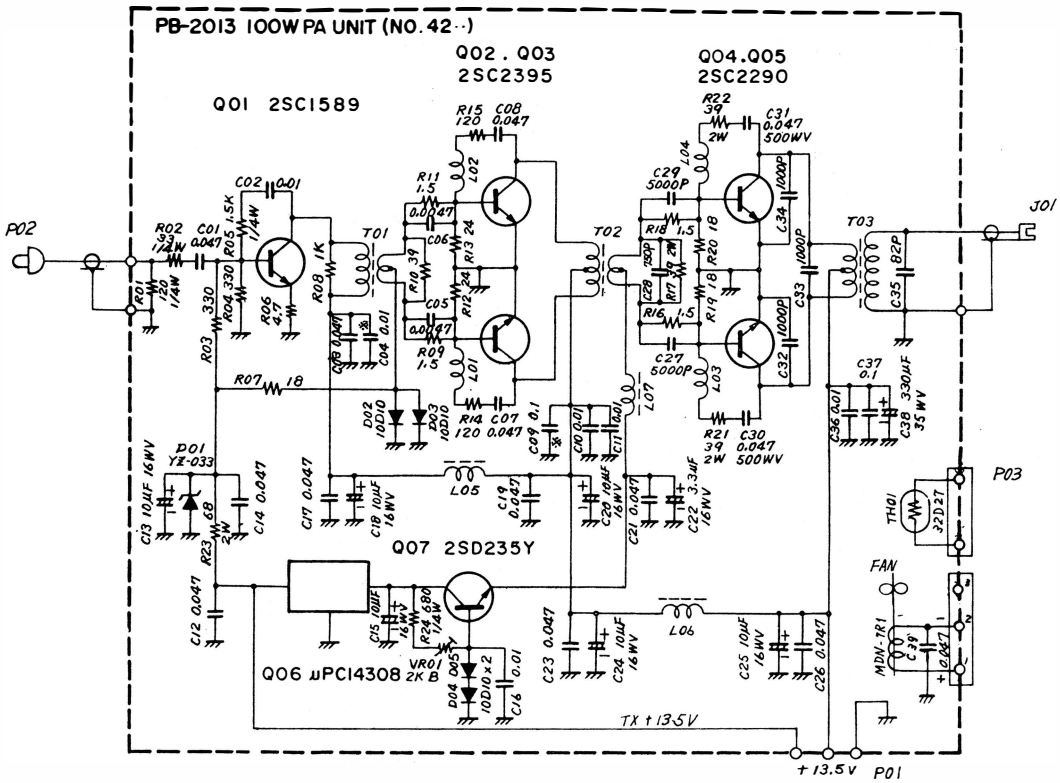

sidetone oscillator Q_{3010} **(2SC1815Y)**, for monitoring of the code signal during CW operation. The output from Q_{3010} is delivered to the final AF amplifier, Q_{3022}.

AM

The microphone signal modulates the 8988.3 kHz carrier signal, and the resulting signal is amplified by Q_{2007} and passed around the SSB filter. From Q_{2008}, the signal path is the same as that on SSB.

ALC CIRCUIT

A variety of level control systems are included in the FT-707, for protection against overdrive, excess temperature, or high SWR.

At the directional coupler, the output voltage is sensed. When a high SWR condition exists, the voltage is detected by D_{4004} and D_{4006} **(1SS16)** and amplified by Q_{2024} **(2SC1815Y)** and fed to the RF, IF, and AF stages of the transmitter, controlling the gain of those stages. In the case of overdrive, the ALC voltage is detected by D_{4005} and D_{4007} **(1SS16)** and amplified by Q_{2023} **(2SC1815Y)** for control of the aforementioned stages.

A thermistor on the final amplifier board provides detection of excess temperature. When the operating temperature of the final transistors rises to an unacceptable figure, control voltage developed at comparator Q_{4801} **(AN6552)** is fed to Q_{4802} **(2SC1815Y)**, which drives Q_{4803} **(2SD592)**, providing operating voltage for a cooling fan on the amplifier heat sink. Control voltage is also fed from Q_{4801} to amplifier Q_{4804} **(2SC1815Y)**, and this voltage is delivered to the ALC line to the RF, IF, and AF stages.

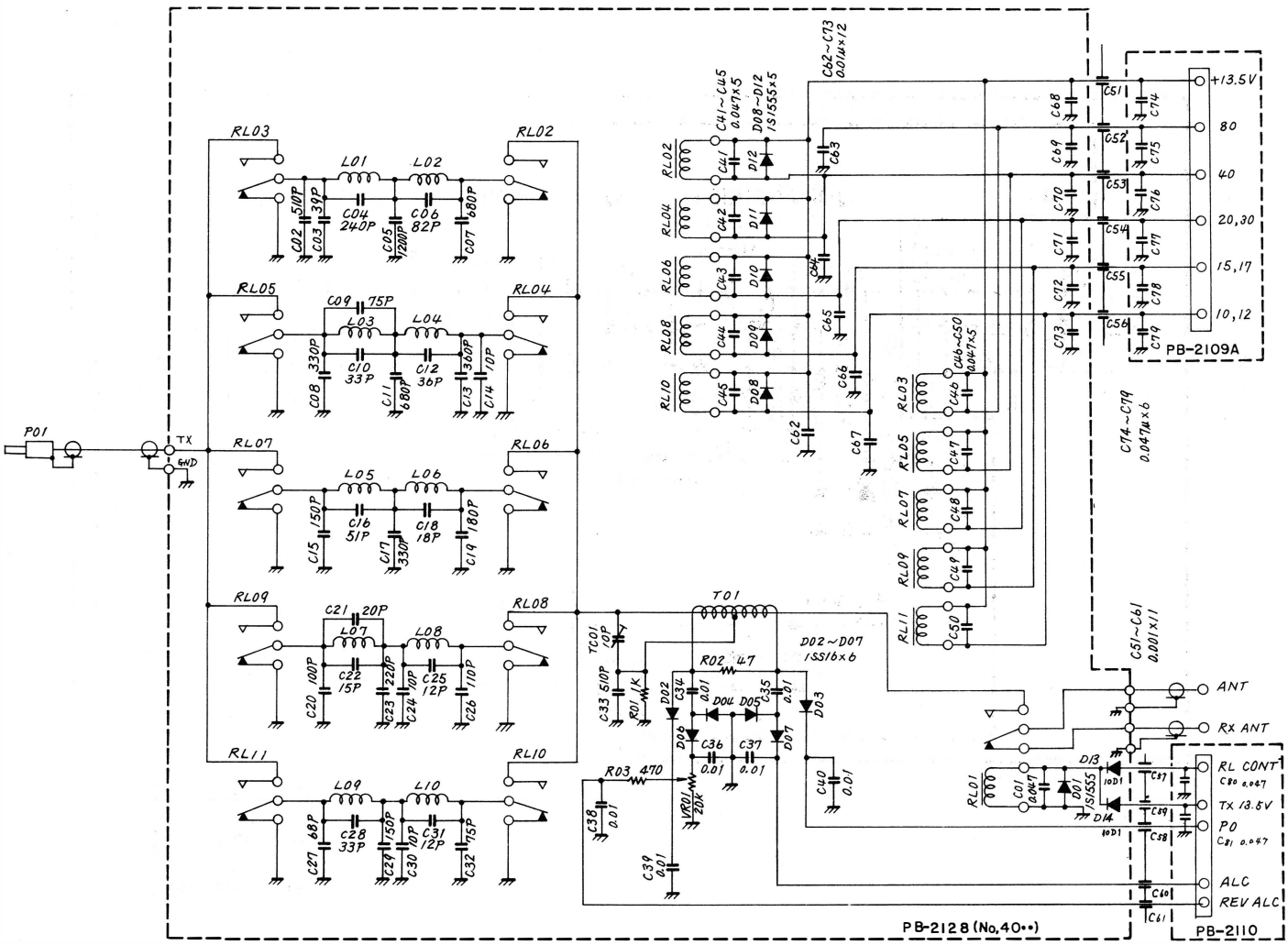

COMMON CIRCUIT

VOX circuit

A portion of the microphone input signal is amplified by Q_{3011} **(2SY1815Y)** and detected by D_{3014} **(1N60)**, producing a DC voltage. This voltage is amplified by Q_{3012} **(2SC1815Y)** and Q_{3013} **(2SA733)**. Q_{3013} drives Schmitt trigger Q_{3014}/ Q_{3018} **(2SC1815Y)**; when Q_{3018} is driven ON, relay driver Q_{3019} **(2SA496Y)** is turned ON, activating the antenna relay. An RC circuit composed of front panel DELAY control VR_{5101} and C_{3043} sets the relay hang time by delaying the cutoff of Q_{3013} when speech input stops.

A portion of the speaker output is amplified by Q_{3015} **(2SC1815Y)** and detected by D_{3015} **(1N60)**. This provides a bucking voltage which is amplified by Q_{3016} **(2SC1815Y)** and Q_{3017} **(2SA733)** and fed to Q_{3013}, preventing the speaker output from tripping the VOX circuit.

VFO UNIT (PB-2097)

VFO oscillator Q_{4301} **(2SC1815Y)** operates in a modified Colpitts configuration, providing a 5.0–5.5 MHz VFO signal. The 500 kHz tuning range is tuned by variable capacitor VC_{4301}, which is a two-section capacitor. The sub-blades of VC_{4301} provide temperature compensation against frequency change caused by thermal expansion of the main blades. The VFO signal is fed through buffer amplifiers Q_{4302} **(2SK19GR)** and Q_{4303} **(2SC1815Y)**, passed through a low-pass filter, and fed, through diode switches D_{1044}/D_{1045} **(1S1555)**, to the premix IC, Q_{1006}.

Varactor diode D_{4301} is placed in the oscillator circuit during clarifier operation. In accordance with the tuning of the front panel clarifier control and L_{4306}, the capacitance variation induced in D_{4301} allows offset from the main dial frequency of ±2.5 kHz.

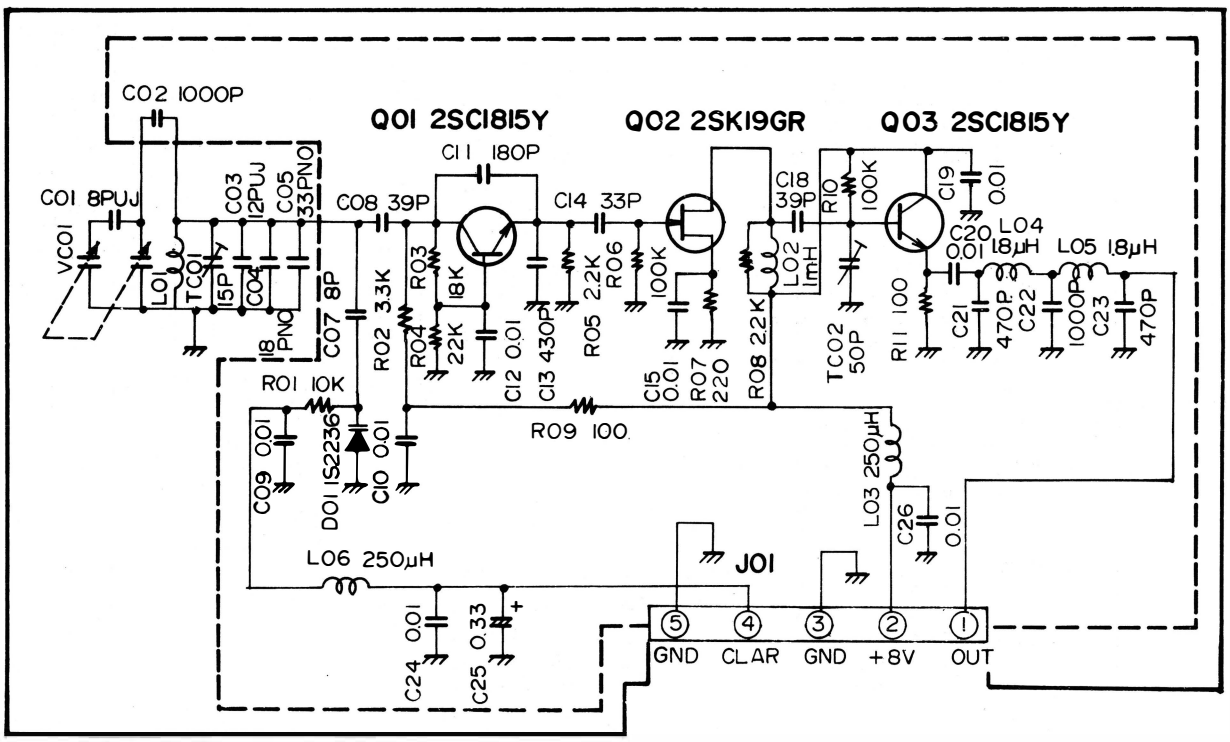

FT-707
VFO UNIT
PB-2097(NO.43··)

PREMIX CIRCUIT (AF UNIT)

The premix local signal is generated by crystal oscillator $Q_{3025}-Q_{3033}$ **(2SC380TM-Y)**, the oscillator in use being selected by diode switches $D_{3029}-D_{3037}$ **(1S1555)**. The output from the oscillator passes through Pin 2 of J_{1006} and Pin 1 of J_{1005} in the RF Unit. This signal is fed to Pin 11 of the IC double balanced mixer (Q_{1006}).

The 5.0–5.5 MHz VFO signal is fed through Pin 8 of J_{1005}, to the diode switch selecting either FIX or VFO, and to a low-pass filter. Next, this signal passes to the mixer, where the VFO signal is mixed up with the premix local signal, resulting in the output premix signal, shown in Table 3.

The premix signal is passed through a broadband transformer and a bandswitched bandpass filter, which eliminates spurious signals on the premix output. Selection of the desired filter is performed by the diode switches of $D_{1046}-D_{1057}$ **(1SS53)**. The filtered signal is then amplified by a three-stage amplifier chain consisting of Q_{1010}, Q_{1011} **(2SC1923R)**, and Q_{1012} **(2SC2407)**. Finally, the signal is delivered to the double balanced mixer, which provides the TX and RX IF signal.

A portion of the output from Q_{1011} is amplified by buffer Q_{1013} **(2SC380TM-Y)** for delivery to the frequency counter for display purposes.

		XCO Frequency MHz	PREMIX OUT Frequency MHz
80m	X_{3005}	17.9845	12.4875–12.9875
40m	X_{3006}	21.4845	15.9875–16.4875
30m	X_{3004}	24.4875	18.9875–19.4875
20m	X_{3007}	28.4875	22.9875–23.4875
17m	X_{3013}	32.4875	26.9875–27.4875
15m	X_{3008}	35.4875	29.9875–30.4875
12m	X_{3014}	38.9875	33.4875–33.9875
10mA	X_{3009}	42.4875	36.9875–37.4875
10mB	X_{3010}	42.9875	37.4875–37.9875
10mC	X_{3011}	43.4875	37.9875–38.4875
10mD	X_{3012}	43.9875	38.4875–38.9875

Table 2–1

	Nominal Premix Local Frequency (MHz)	LSB (MHz)	USB (MHz)	CW. AM (MHz)
80m	12.4875–12.9875	12.486–12.986	12.489–12.989	12.4883–12.9883
40m	15.9875–16.4875	15.986–16.486	15.989–16.489	15.9883–16.4883
30m	18.9875–19.4875	18.986–19.486	18.989–19.489	18.9883–19.4883
20m	22.9875–23.4875	22.986–23.486	22.989–23.489	22.9883–23.4883
17m	26.9875–27.4875	26.986–27.486	26.989–27.489	26.9883–27.4883
15m	29.9875–30.4875	29.986–30.486	29.989–30.489	29.9883–30.4883
12m	33.4875–33.9875	33.486–33.986	33.489–33.989	33.4883–33.9883
10mA	36.9875–37.4875	36.986–37.486	36.989–37.489	36.9883–37.4883
10mB	37.4875–37.9875	37.486–37.986	37.489–37.989	37.4883–37.9883
10mC	37.9875–38.4875	37.986–38.486	37.989–38.489	37.9883–38.4883
10mD	38.4875–38.9875	38.486–38.986	38.489–38.989	38.4883–38.9883

Table 2–2

COUNTER UNIT (PB-2086A)

A portion of the local oscillator signal appears at the F IN terminal of the COUNTER Unit, where it is amplified by Q_{4401} **(3SK73)** and Q_{4403} **(2SC1674L)**. The signal is then fed to the LSI counter chip, Q_{4012} **(MSM9520RS)**. A portion of the output from Q_{4403} is detected by D_{4401} and D_{4402} **(1S1555)** and amplified by Q_{4404} **(2SC1815Y)**, providing an AGC voltage which keeps the signal input level to the LSI constant by controlling the gain of Q_{4401}.

The output from the LSI drives LED digit drivers Q_{4406} –Q_{4411} **(2SA952L)** and segment drivers Q_{4413} –Q_{4419} **(2SA952L)**, which control the digital display light emitting diodes, D_{4501} –D_{4506} **(HP5082–7623)**.

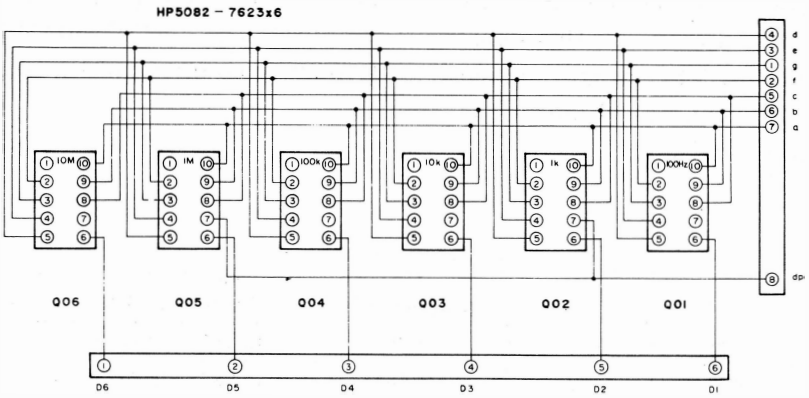

DISPLAY UNIT PB-2098

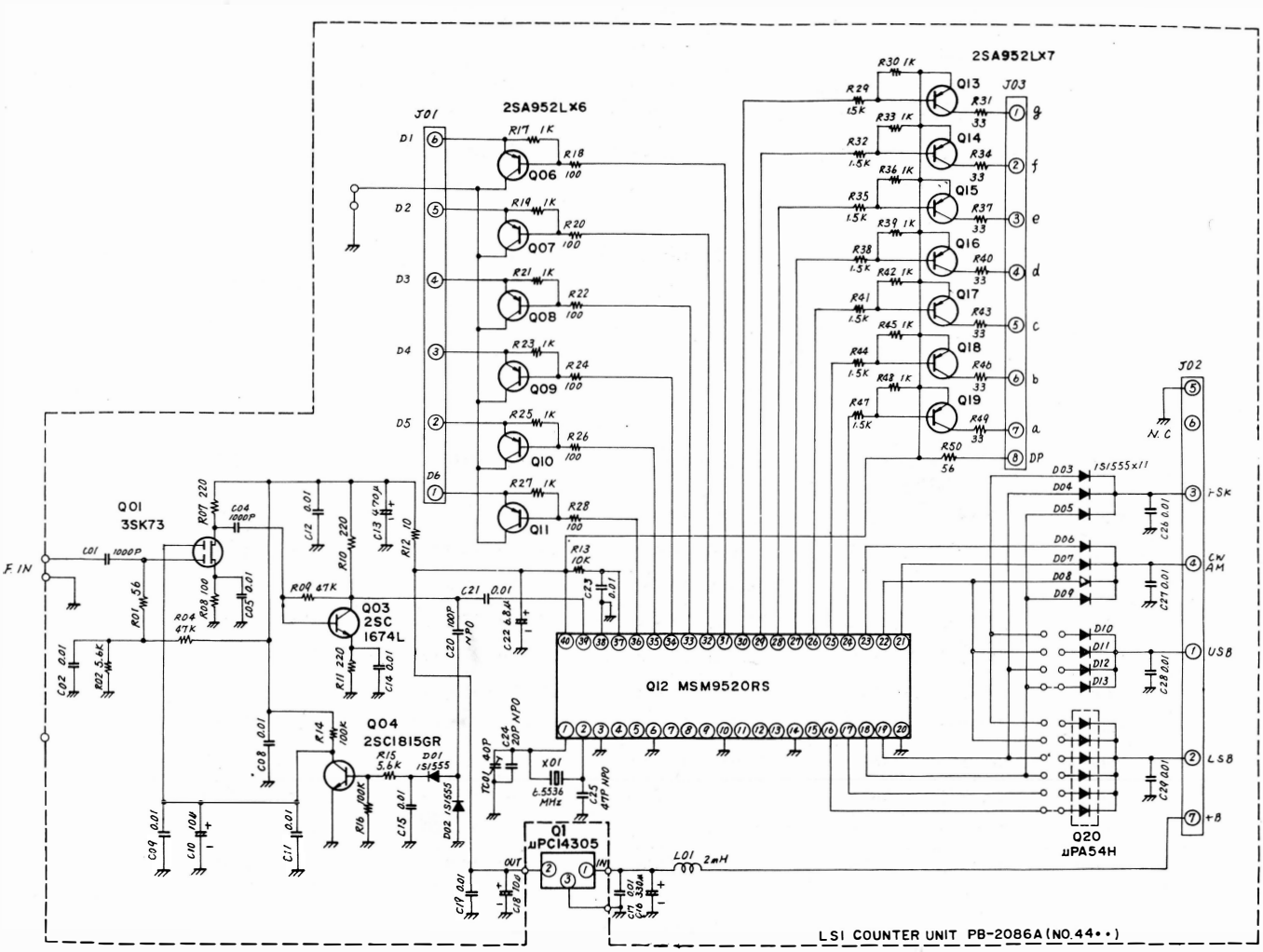

MEMO

MEMO

SECTION 3—SERVICING

OUTER COVER REMOVAL 3-1
FRONT PANEL REMOVAL 3-2
REAR PANEL REMOVAL 3-4
100W PA UNIT REMOVAL 3-5
MAIN CHASSIS EXPLODED VIEW 3-6
BOARD LAYOUT 3-7
SOLDERING AND DESOLDERING TECHNIQUE 3-9
CIRCUIT TRACE REPAIR 3-10
INSTALLATION: OPTIONS
- CW FILTER INSTALLATION 3-12
- FIX (CRYSTAL CONTROLLED) OPERATION 3-13

MODIFICATIONS
- S/N IMPROVEMENT ON 80M BAND 3-14
- MODIFICATION TO ELIMINATE "CLICKING" NOISE ON CW 3-14
- TX IMD DISTORTION IMPROVEMENT 3-15
- MARKER MODIFICATION 3-16
- PREMIX MODIFICATION 3-16
- RECEIVER INPUT CIRCUIT MODIFICATION 3-17
- WARC TX MODIFICIATION 3-18
- FREQUENCY COUNTER PRESET CHANGE 3-19

MAINTENANCE AND ALIGNMENT 3-21
FAULT IDENTIFICATION AND LOCALIZATION 3-29
TROUBLESHOOTING 3-30
RELAY CONNECTION INFORMATION 3-36
CIRCUIT BOARD LAYOUT AND TEST VOLTAGE
- RF UNIT (PB-2093A/PB-2201) 3-37
- IF UNIT (PB-2094A) 3-43
- AF UNIT (PB-2095A) 3-46
- AVR UNIT (PB-2099A) 3-49
- COUNTER/DISPLAY UNIT (PB-2086A-3540/PB-2098-3540) 3-50
- VFO ASSEMBLY (PB-2097A) 3-54
- 100W PA UNIT (PB-2013) 3-58
- HPF/FAN MOTOR CONTROL UNIT (PB-2101) 3-61
- LEVEL METER UNIT (PB-2100) 3-62
- SW UNIT (PB-2102) 3-63
- VR UNIT (PB-2103A) 3-63
- SWITCH ASSEMBLIES 3-64
- POTENTIOMETER ASSEMBLIES 3-65

OUTER COVER REMOVAL

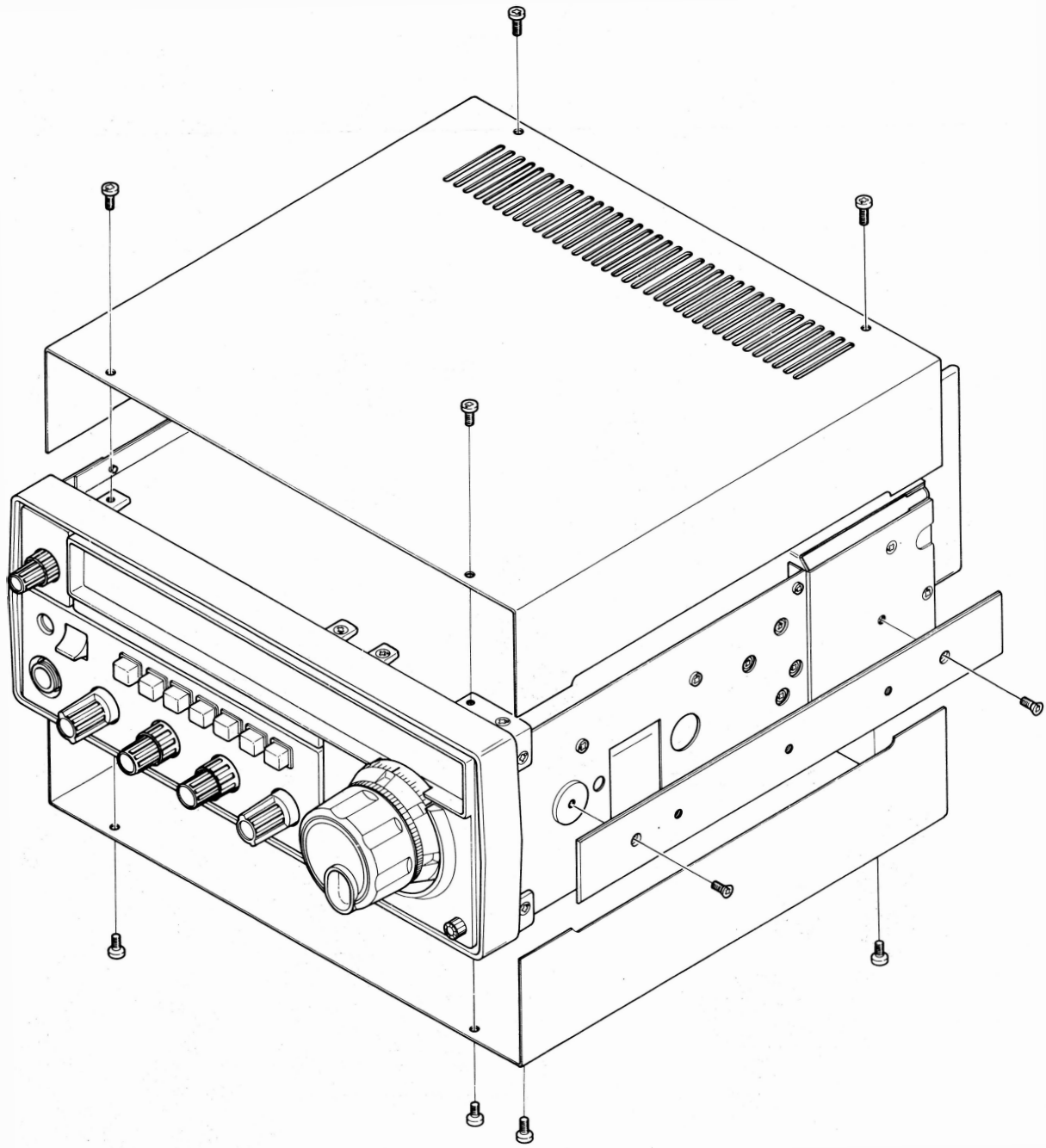

FRONT PANEL REMOVAL(A)

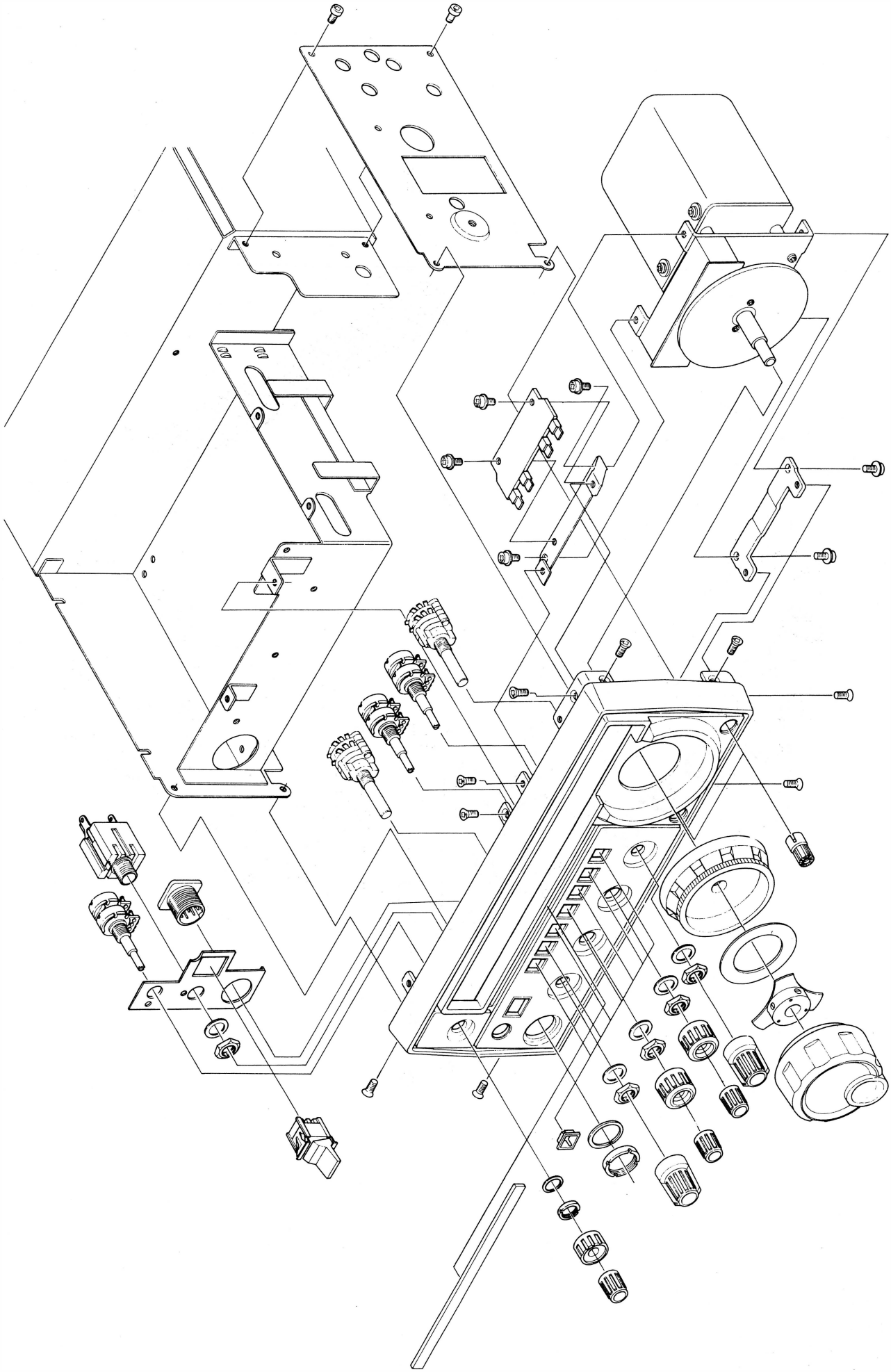

FRONT PANEL REMOVAL(B)

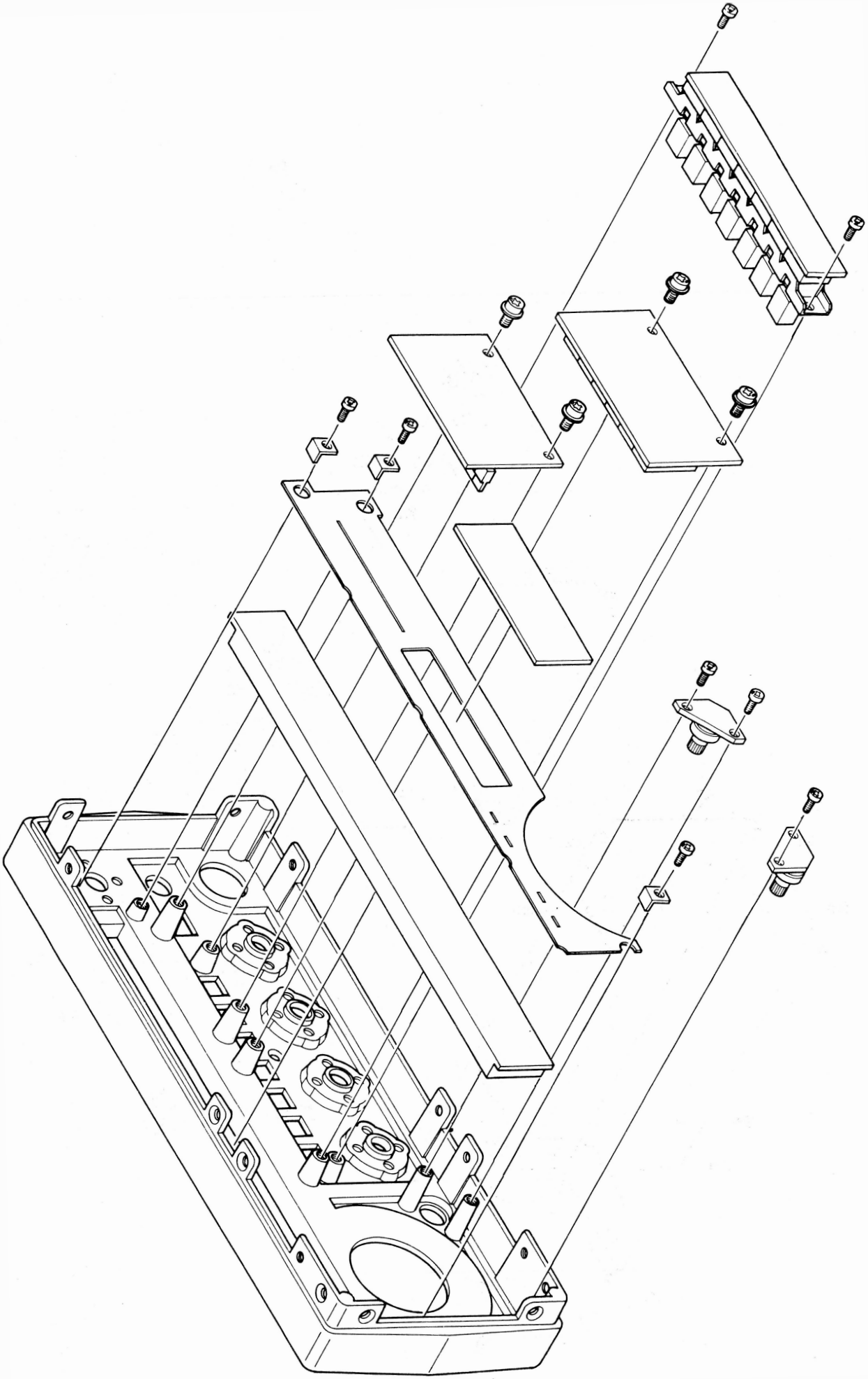

REAR PANEL REMOVAL

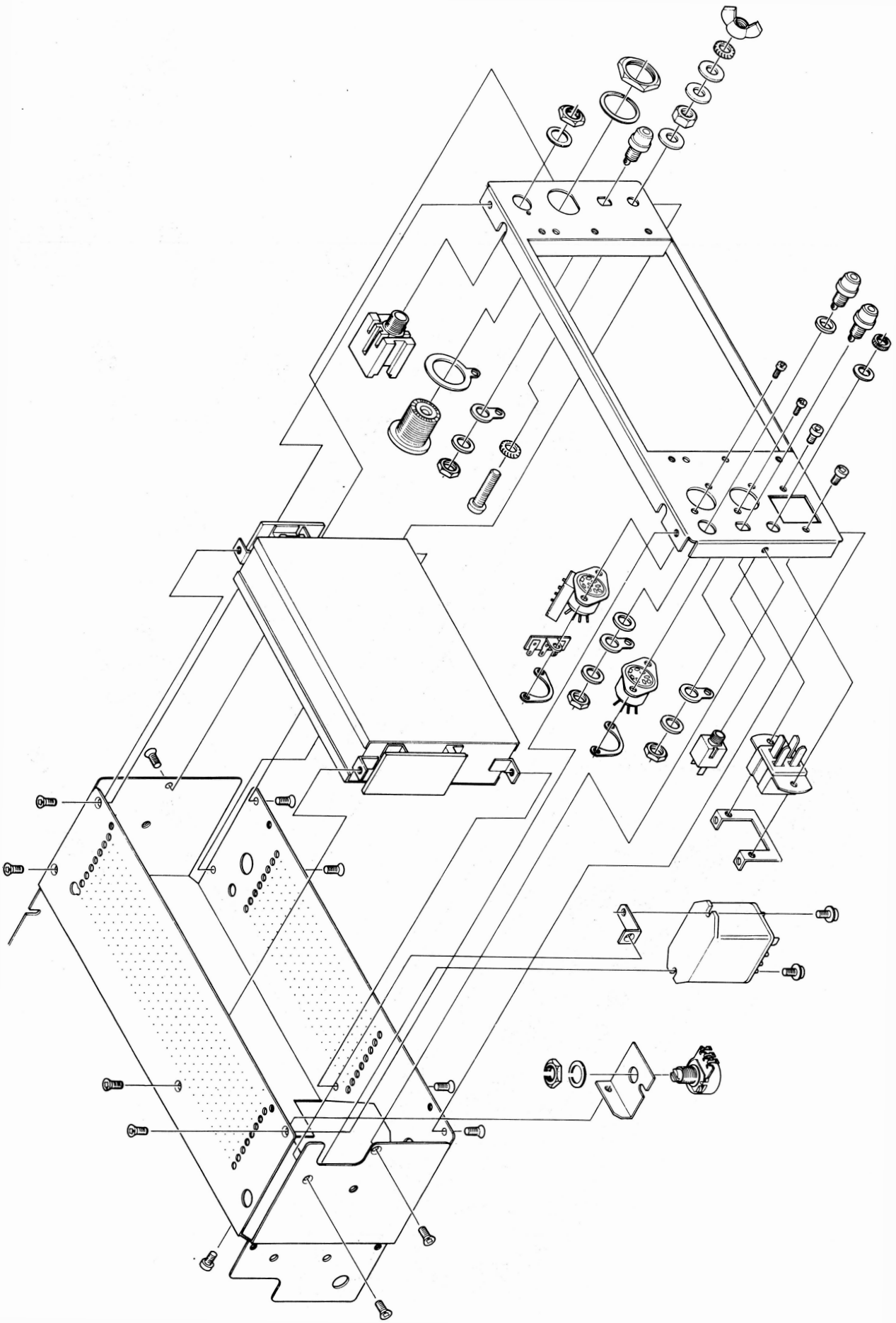

100W PA UNIT REMOVAL

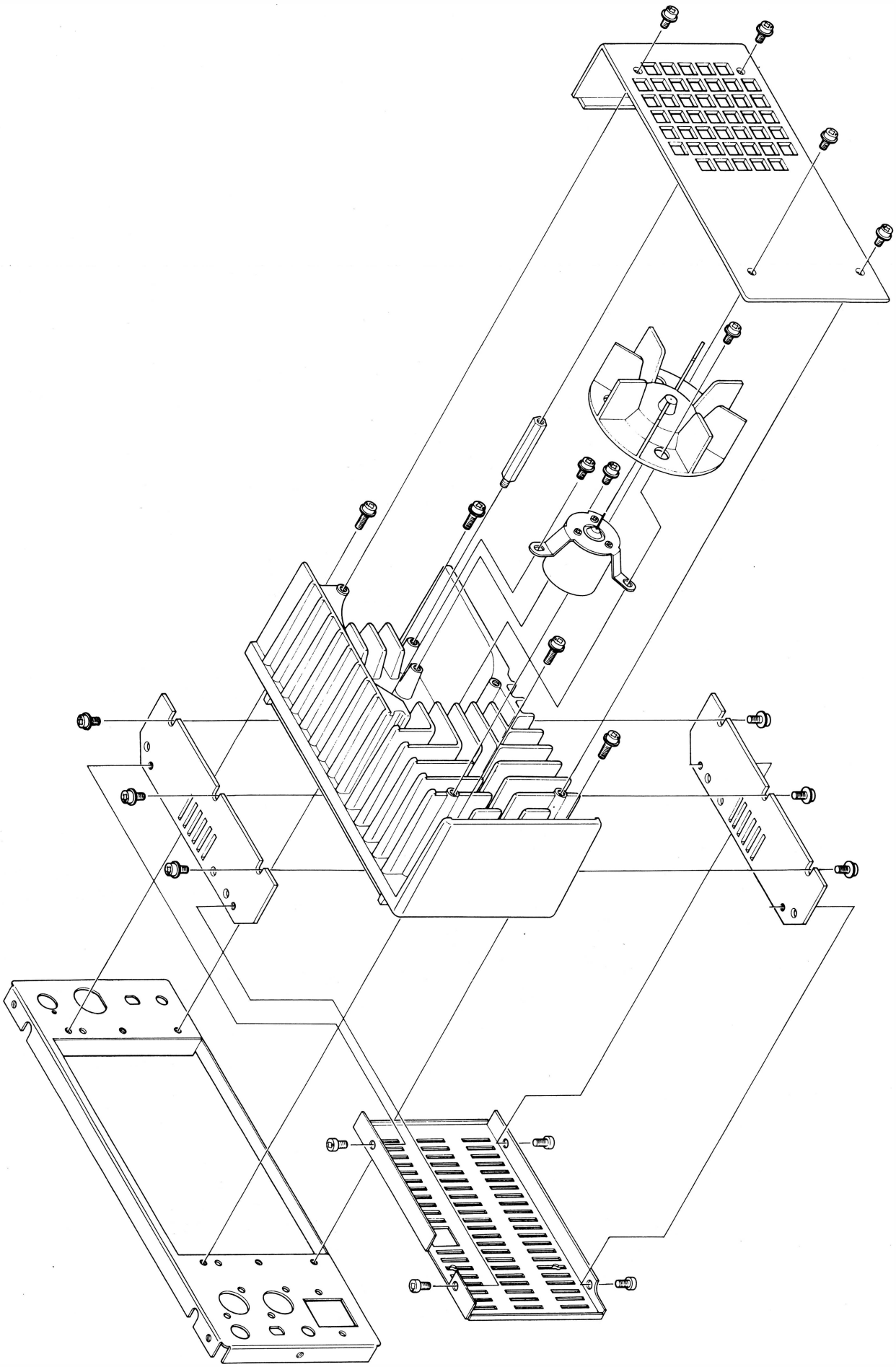

MAIN CHASSIS EXPLODED VIEW

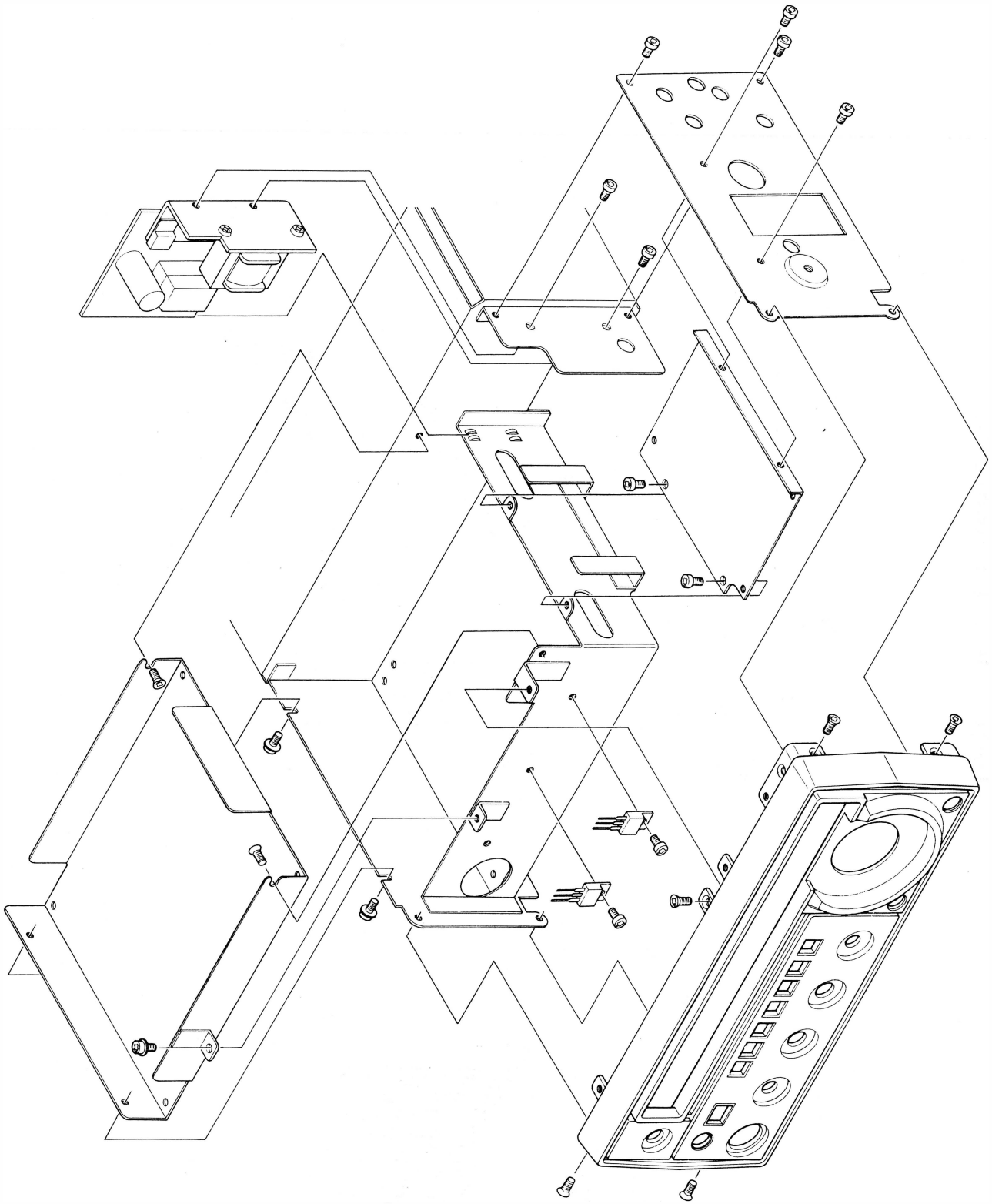

BOARD LAYOUT

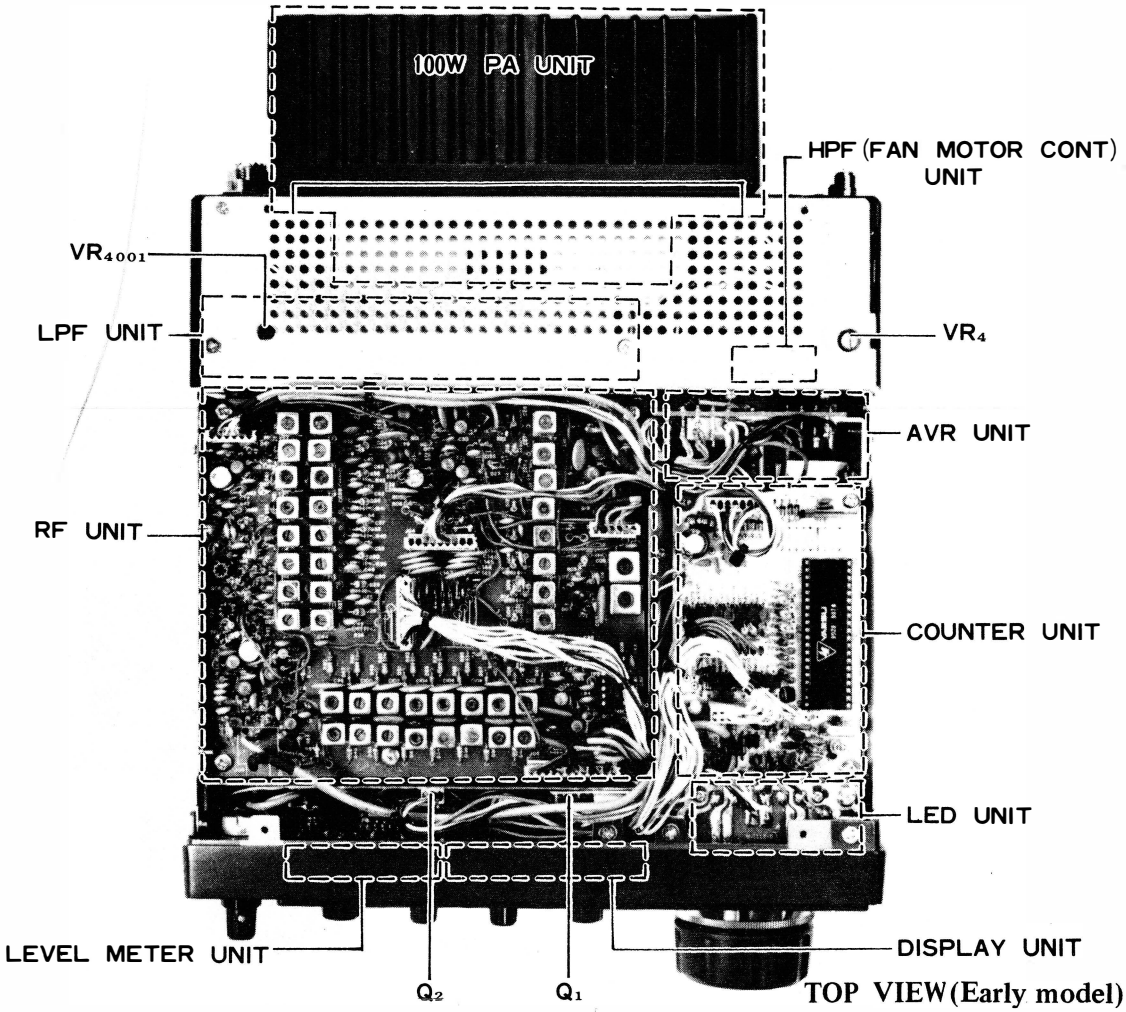

TOP VIEW (Early model)

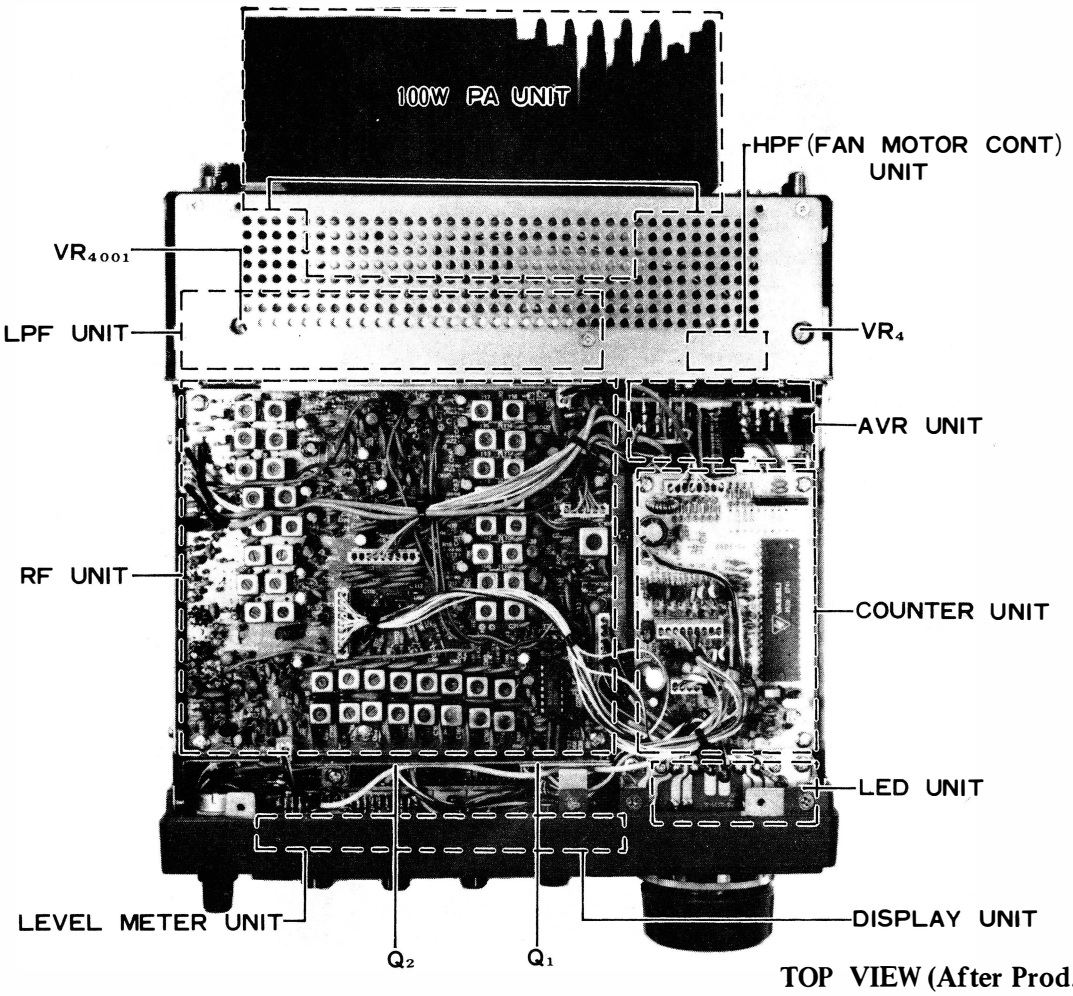

TOP VIEW (After Prod. 11)

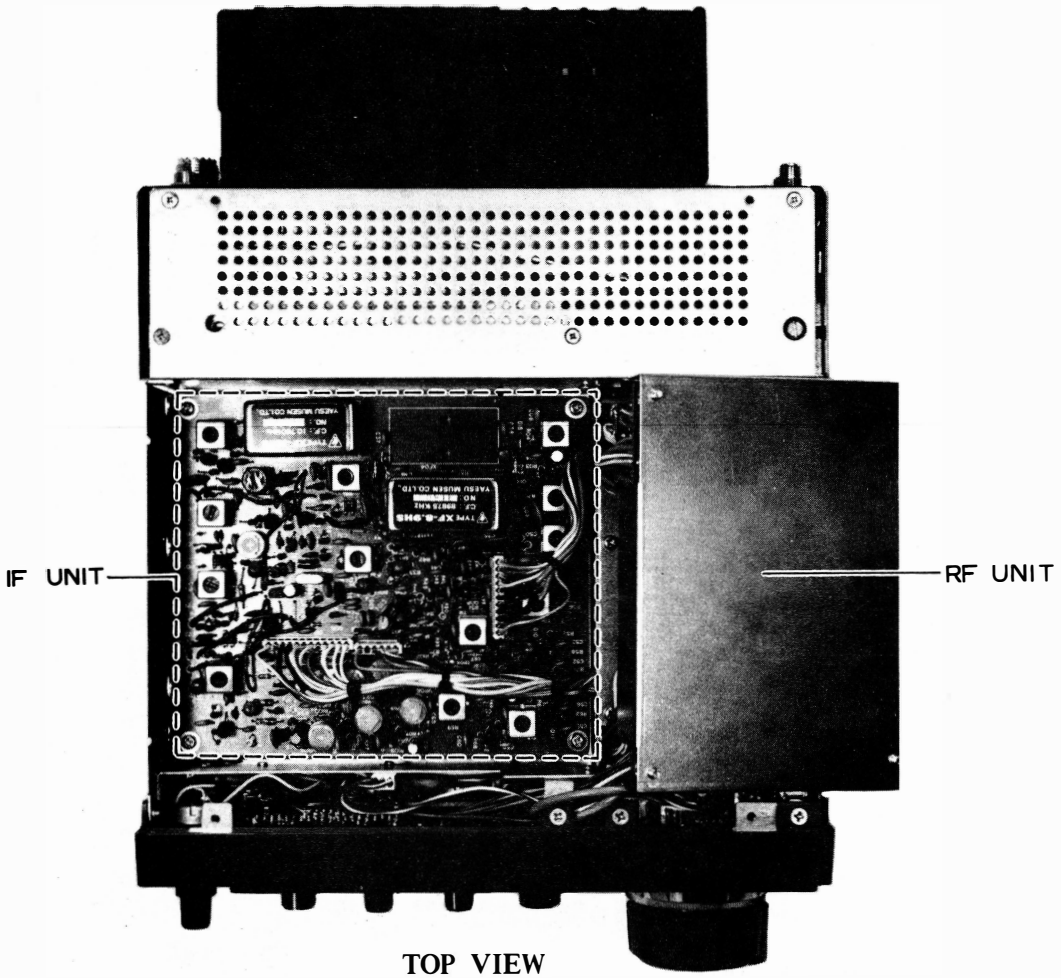

TOP VIEW

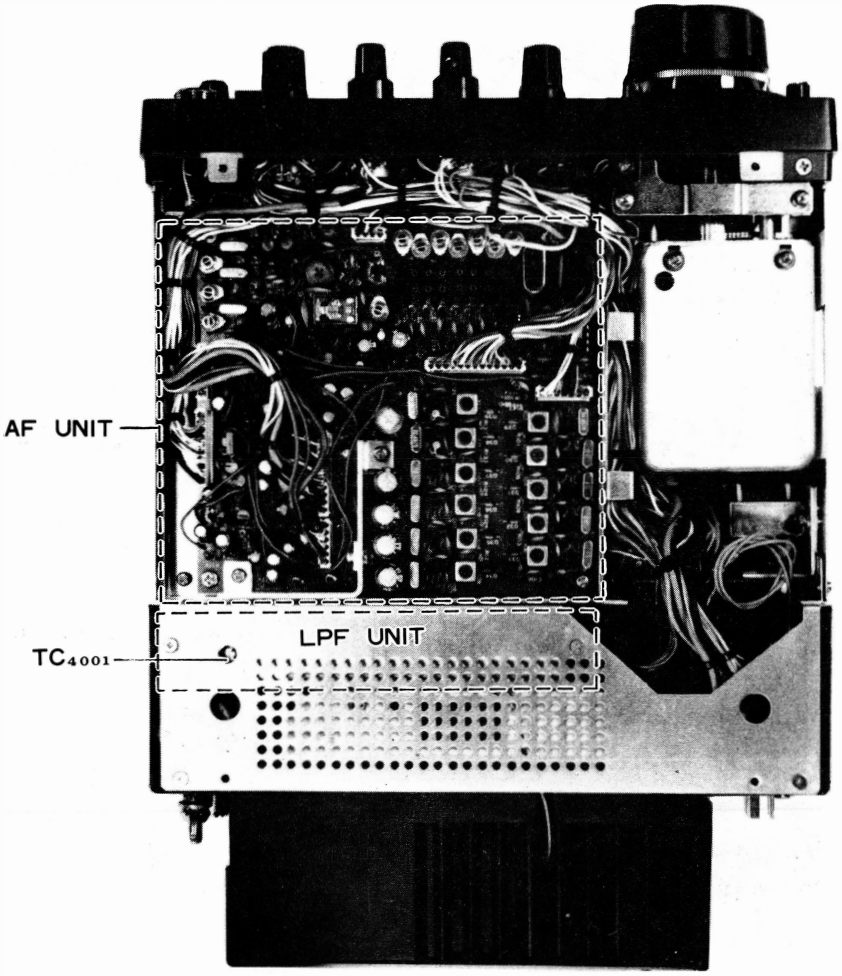

BOTTOM VIEW

SOLDERING AND DESOLDERING TECHNIQUE

SOLDERING AND DESOLDERING TECHNIQUE ON PRINTED CIRCUIT BOARDS

The FT-707 circuit boards are tough, but mishandling during soldering can cause circuit traces to "lift." While this does no permanent damage to the board, much servicing trouble can result, because of the tendency for this lifted trace to break. A few simple precautions will keep your circuit boards in A-1 condition.

1. Use only a 12 to 30 watt chisel-tip soldering iron. Yes, some "repairmen" have been known to use small blowtorches on cards.

2. Use only a soldering iron equipped with a three-wire cord, with the tip grounded. Also acceptable is a soldering iron isolated through a transformer. An old soldering iron or gun may have 117 volts on the tip, and will certainly cause more damage than it repairs!

3. USE ONLY 60/40 ROSIN CORE SOLDER. Acid core solder should be thrown away if you find it in your radio shop!

4. Use a solder sucker and solder tape to ensure a professional repair job.

5. If you **do** lift a trace, don't worry! Read on to find out how to repair traces like a pro.

NOTES ON USE OF CMOS IC's:

As CMOS devices are extremely sensitive to damage from static electricity, special precautions must be observed.

In storage, use only a non-inductive sponge.

When installing a CMOS IC in a socket, or on a circuit board, be certain that the power is off. In addition, the technician should rest his hand on the chassis as the component is inserted, so as to place his hand at the same level as the chassis (better to discharge small amounts of static electricity through your fingers than through a $5 IC !).

When soldering a CMOS IC onto a circuit board, use a low wattage iron, and be sure to ground the tip with a clip lead, if the tip is not grounded through a three-wire power cord.

INSERTION OF PARTS ON CIRCUIT BOARDS

All of the below are acceptable ways of inserting components into circuit board mounting holes.

(a) Bend leads slightly

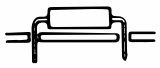

(b) Straight-in mounting

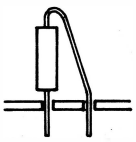

(c) Vertical mounting

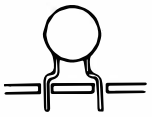

(d) Preformed disc ceramic capacitor

(e) Preformed resistor, diode, etc.

CIRCUIT TRACE REPAIR

Most of the printed circuit boards used in the FT-707 are single sided boards. However, occasionally a double-sided board is used, in situations where high shielding is required. A comparison of the two types is shown below.

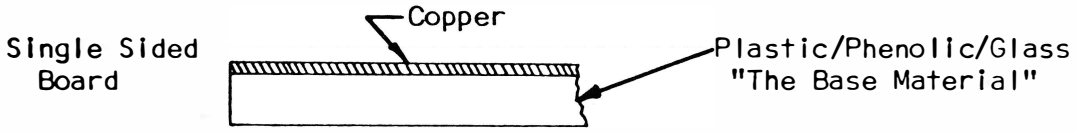

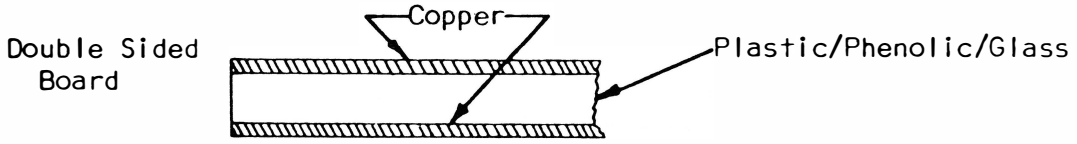

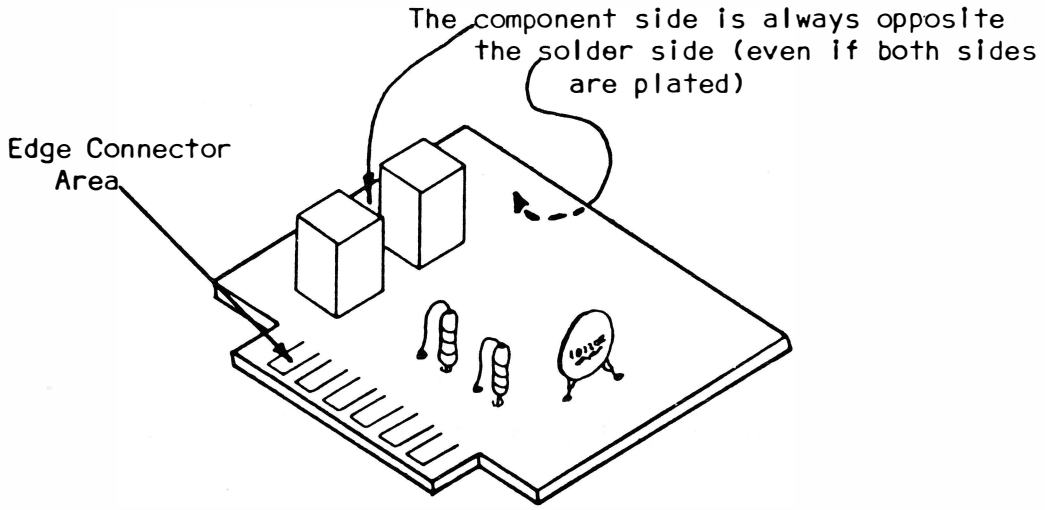

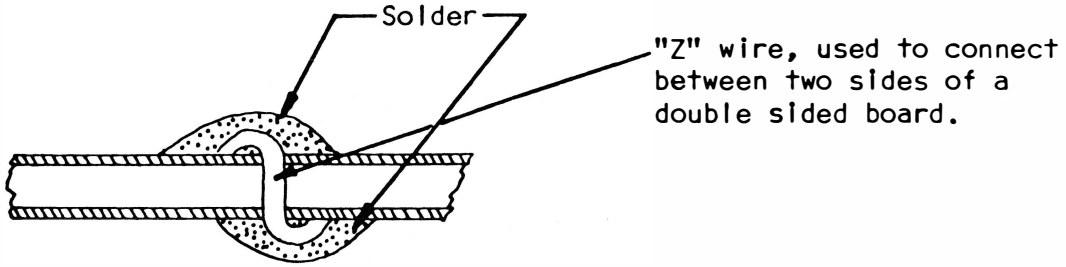

Sometimes, after the design and drafting of a board are completed, a board is produced with an error in it. Though non-technical managers sometimes suffer a stroke at hearing of this situation, it is not unheard of in engineering circles. Thus, should you encounter etch cuts and jumpers on a board, be assured that the modifications were made in the interest of securing optimum performance. Unless you consider your expertise to be superior to that of the design engineer, please leave these mods in place.

However, in service work the occasion does arise when a trace must be cut. Proceed as follows.

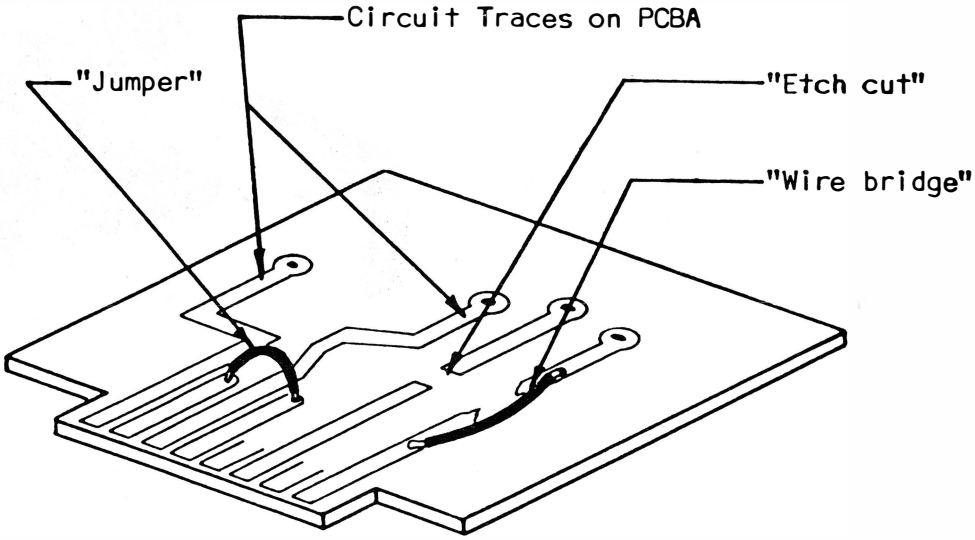

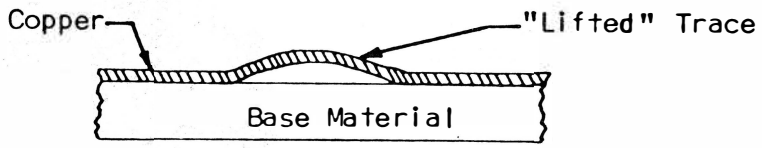

If you have previously lifted a trace, make an etch cut on each side of the lifted trace, and install a wire bridge as shown in the drawing.

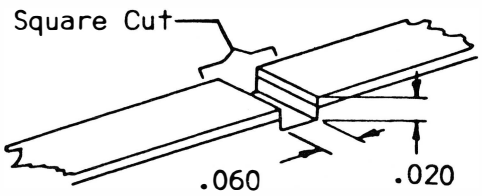

Coat Cut Area With Eastman 910

CW FILTER INSTALLATION

(1) Refer to Figure 3-1, and remove the top cover of the transceiver.

(2) Refer to Figure 3-2, and remove the three screws marked "A" in the drawing. Remove the RF Unit.

(3) Refer to Figure 3-3, and remove the four screws marked "B" restraining the IF Unit. Remove the three connectors of the IF Unit, and remove the board from the transceiver.

(4) Mount the CW filter in the position shown in Figure 3-4. Cut the two jumpers shown in the drawing when the CW filter is installed.

(5) Replace the IF Unit and RF Unit into the transceiver. Replace the top cover of the transceiver. Installation is now complete. The CW filter will be selected when the MODE switch is set to CW-N, while the SSB filter will be selected when the MODE switch is set to CW-W.

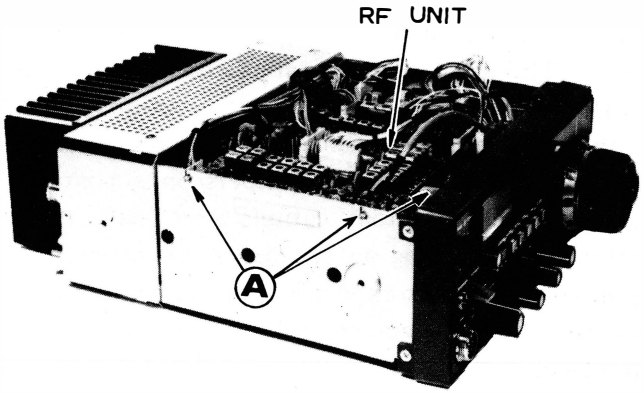

Fig. 2

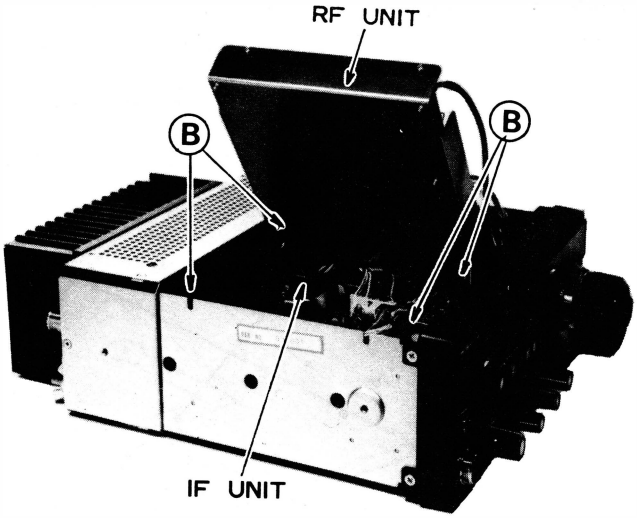

Fig. 3-3

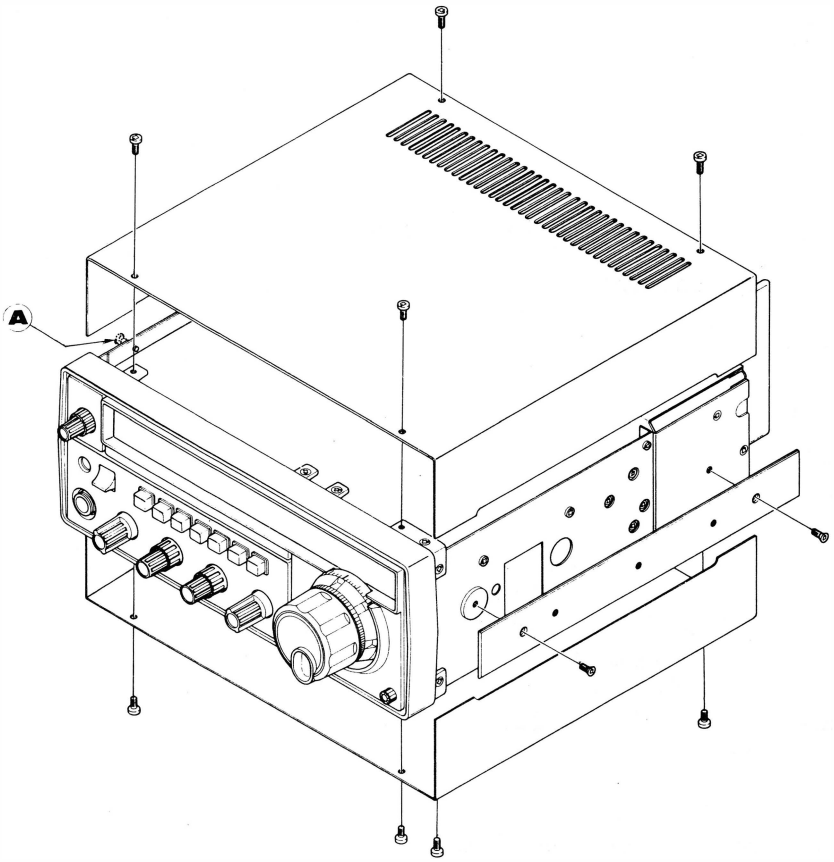

Fig. 3-1

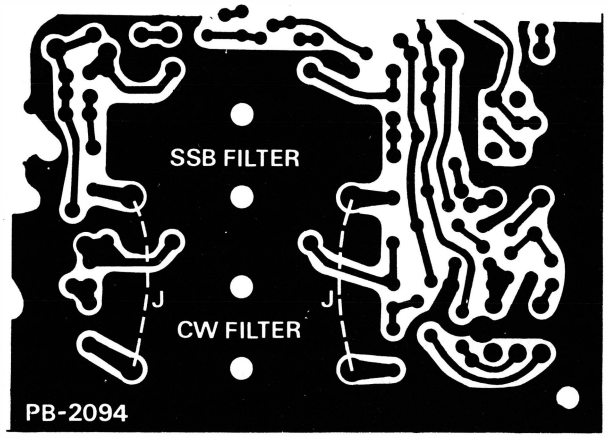

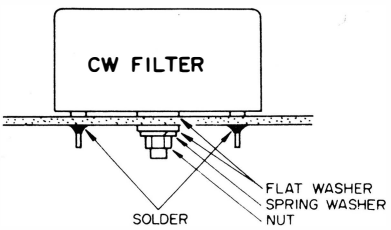

Fig. 3-4

FIX (CRYSTAL CONTROLLED) OPERATION

Fixed channel operation is possible by using crystals installed in the AF UNIT. The VFO/FIX switch must be placed in the FIX position. There is only one crystal controlled channel available per band with the FT-707. Crystals are optional. (except 30m band)

Crystals must fall within the specifications shown in Table 3-1, and must fall within the operating range 5.5–5.0 MHz. Frequency calculation for the crystals is made from the formula

$$F_X = F_1 - F_O$$

where F_X is the crystal frequency,
F_1 is a constant derived from Table 3-2.
and F_O is the operating frequency.

For example, let us say it is desired to operate on 7199 kHz LSB. Referring to Table 3-2, we see that for 40 meter LSB, F_1 is 12498.5 kHz. Subtracting F_O (7199 kHz) from F_1 (12498.5 kHz) yields 5299.5 kHz, the crystal frequency (F_X).

For operation on 21420 kHz USB, compute the crystal frequency as follows:

$$F_X = 26498.5 - 21420 = 5078.5 \text{ kHz.}$$

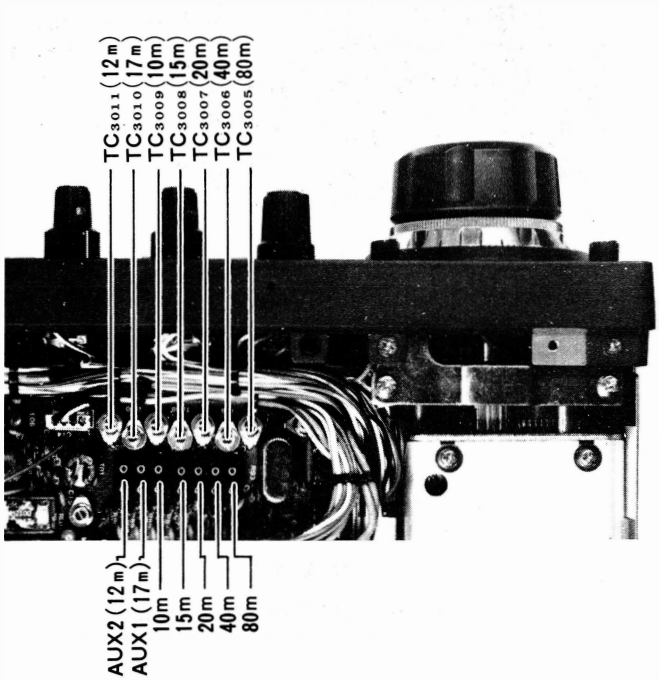

Inspection of the values of F_1 in Table 3-2 will reveal that the 7199 kHz crystal for LSB will work on 14202 kHz, 21202 kHz, etc. Of course, LSB is not normally used on these bands. If the operator switches to USB, the operating frequency will be moved 3 kHz (in this case, to 14199 kHz, 21199 kHz, etc.). If the move is made from LSB to CW, the frequency will move 2.2 kHz down. (to 7196.8, 14199.8, etc.)

To net the crystal on frequency when using the FT-707, use the transceiver digital display to adjust the trimmers for each crystal (TC_{3005} for 80 m, TC_{3006} for 40 m, etc.). Be sure that the CLAR switch is turned off during trimmer adjustment.

The optional crystals are available from your Yaesu dealer.

Holder	HC-25/U
Load C	30pF
Effective R	25Ω
Drive level	5mW

Table 3-1

BAND \ MODE	USB MHz	LSB MHz	AM/CW MHz
80m	8995.5	8998.5	8996.3
40m	12495.5	12498.5	12496.3
※ 30m	15498.5	15501.5	15499.3
20m	19498.5	19501.5	19499.3
17m	23498.5	23501.5	23501.5
15m	26498.5	26501.5	26499.3
12m	29998.5	30001.5	29999.3
10mA	33498.5	33501.5	33499.3
10mB	33998.5	34001.5	33999.3
10mC	34498.5	34501.5	34499.3
10mD	34998.5	35001.5	34999.3

F_1 (kHz)
Table 3-2

MODIFICATIONS

S/N IMPROVEMENT ON 80M BAND

Beginning with serial number XX090001, the following modification was performed, in order to improve the S/N ratio on the 80 meter band.

Replace C_{2106} 0.01μF ceramic capacitor with a 0.047μF on the IF unit, PB-2029, as shown in the figure 3-5.

MODIFICATION TO ELIMINATE "CLICKING" NOISE ON CW

In earlier models of the FT-707 in which CW filters had been installed, a small clicking noise could be heard coming from the receiver whenever the transceiver changed from transmit to receive. The following modification will eliminate this noise.

Replace C_{2025}, a 1μF electrolytic capacitor with a 3.3μF on the IF unit, PB-2094.

This modification can be adapted to FT-707's with serial numbers below XX10999.

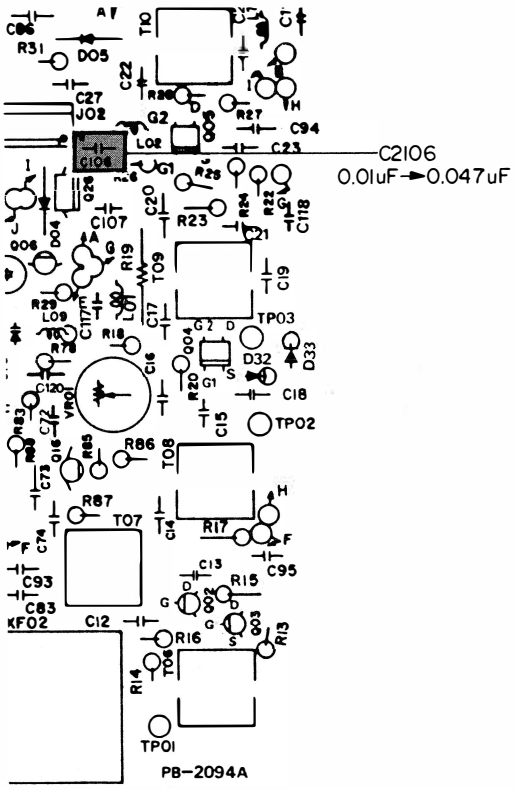

IF UNIT

VIEWED FROM COMPONENT SIDE

Figure 3-5

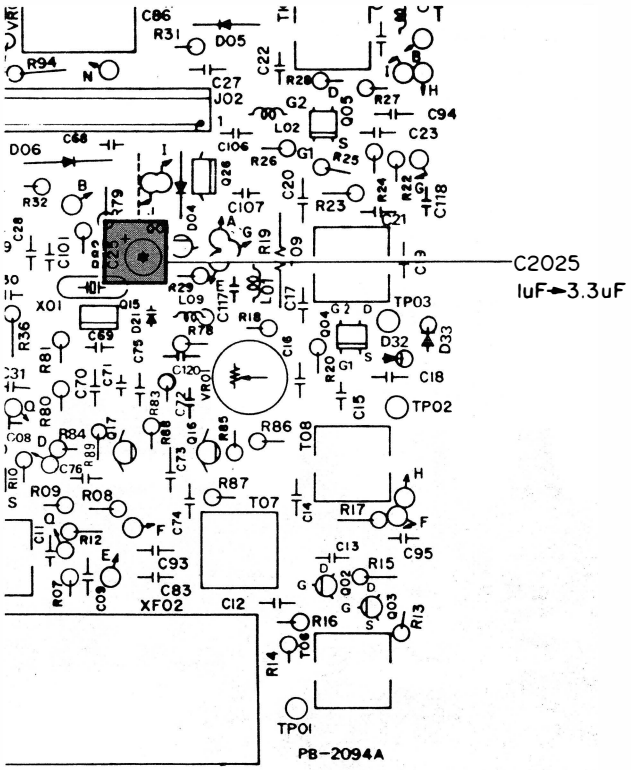

IF UNIT

VIEWED FROM COMPONENT SIDE

Figure 3-6

TX IMD DISTORTION IMPROVEMENT

In some FT-707 transceivers with serial numbers below XX10999, a slight audible distortion occurs on modulation. The problem is caused by a pair of driver transistors, Q_{4202} and Q_{4203} in the 100W PA unit, in which low Hfe transistors are used. If these transistors are marked with an "R" on the package, as shown in the figure below, the following modification can be adopted.

Install two 1/2W 1 ohm resistors parallel to each other, and in series with D_{4202} and D_{4203} in the 100W PA Unit.

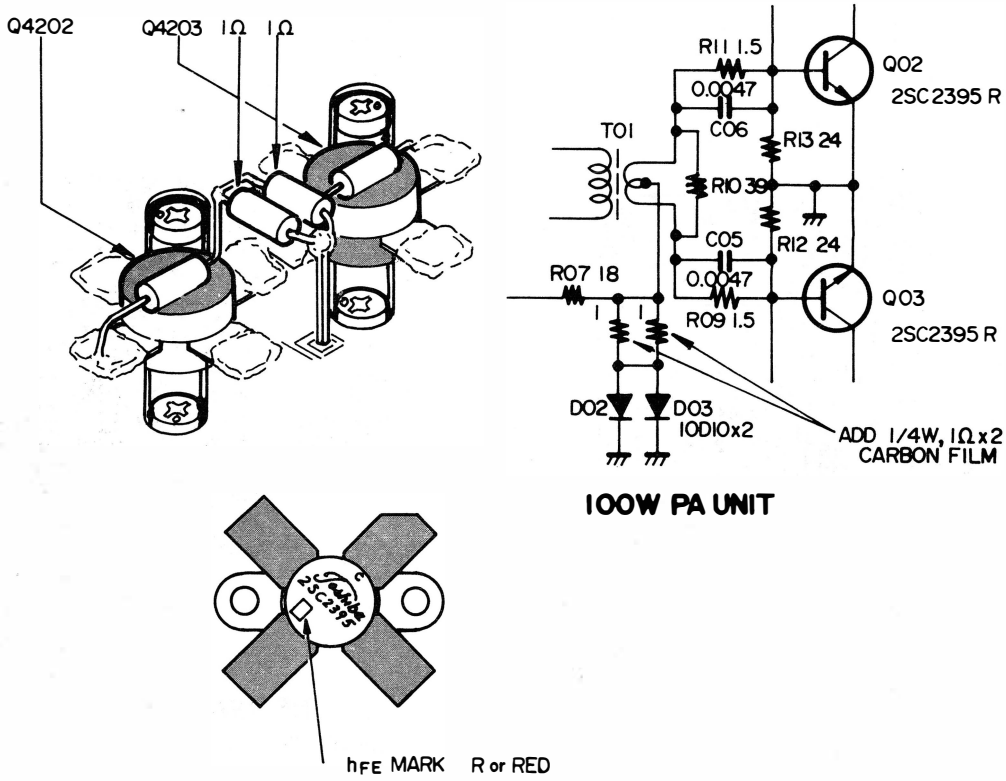

hFE CLASSIFICATION

hFE		MARK	COLOR
MIN	MAX		
20	65	R	RED
55	95	O	RED & BLACK
85	150	Y	BLACK

Figure 3-7

MARKER MODIFICATION

FT-707 units with serial numbers below XX099999 may be modified to increase the marker level, making it easier to zero in on the marker signal on crowded bands.

Replace C_{3137}, a 3pF SL ceramic capacitor with a 6pF SL ceramic capacitor.

PREMIX MODIFICATION

To increase the local injection level to the mixer Q_{1008} on the RF unit, so as to improve RX performance, perform the following modification.

Connect a 470pF dipped mica capacitor, as shown in the figure below, on the RF unit, PB-2093.

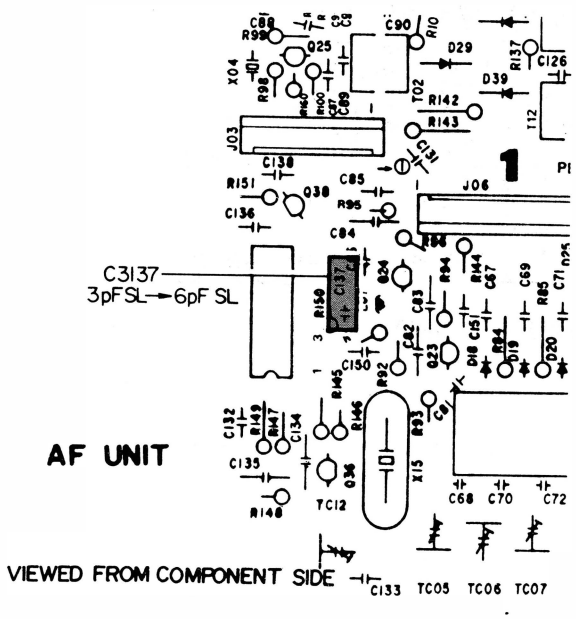

Figure 3-8

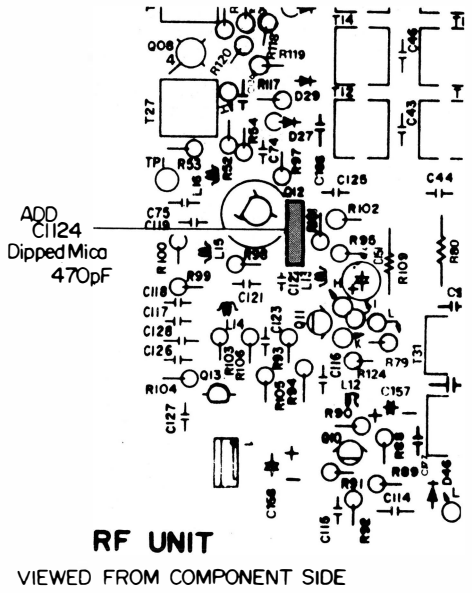

Figure 3-9

RECEIVER INPUT CIRCUIT MODIFICATION

This modification will improve the intermodulation distortion performance of the receivers in transceivers with serial numbers below XX079999 and will ensure attenuation of the high-pass filter below 2 MHz.

Modification Procedure

Replace R_{1013}, R_{1014}, R_{1016} and R_{1018} –R_{1022} with 220 ohms. (See Figure 3-10)
Replace R_{1002} and R_{1008} with 270 ohms. (See Figure 3-10)
Replace C_{4807} and C_{4809} with 1500pF. (See Figure 3-11)

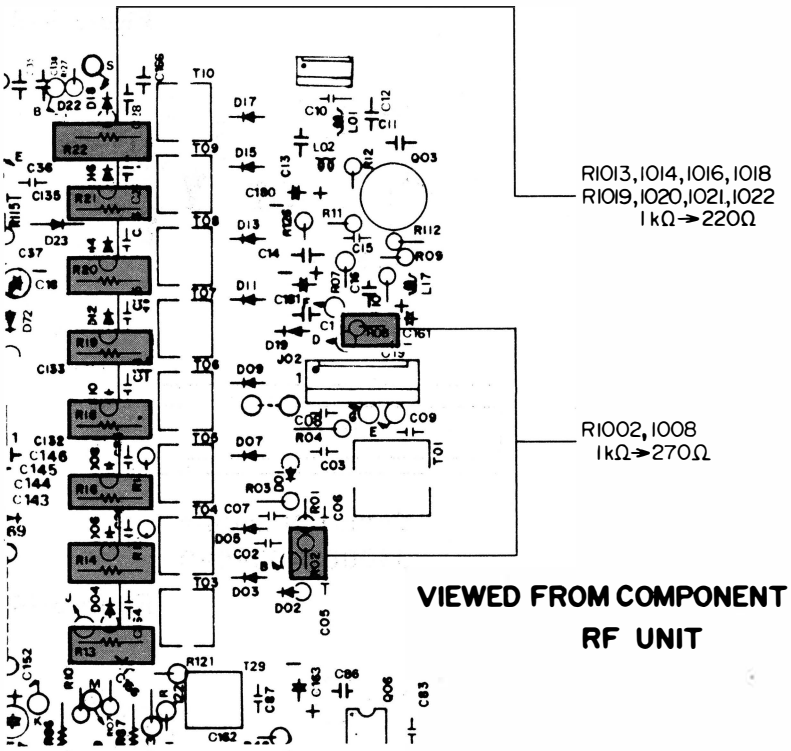

Figure 3-10

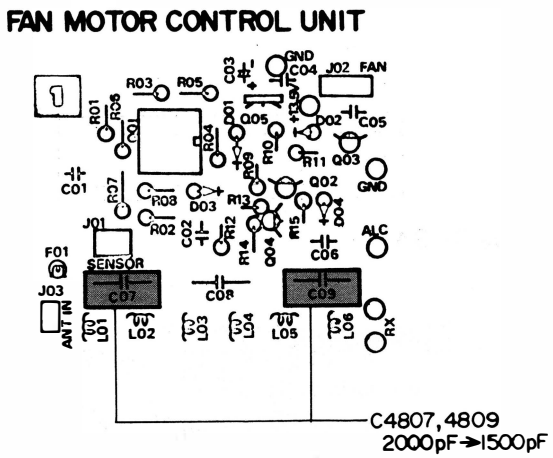

Figure 3-11

WARC TX MODIFICATION

To enable the FT-707 to transmit on the newly allocated amateur bands, the following modifications are required.

Refer to Figures below. Locate the RF UNIT, and remove diodes D_{21}, D_{71} and D_{72}.

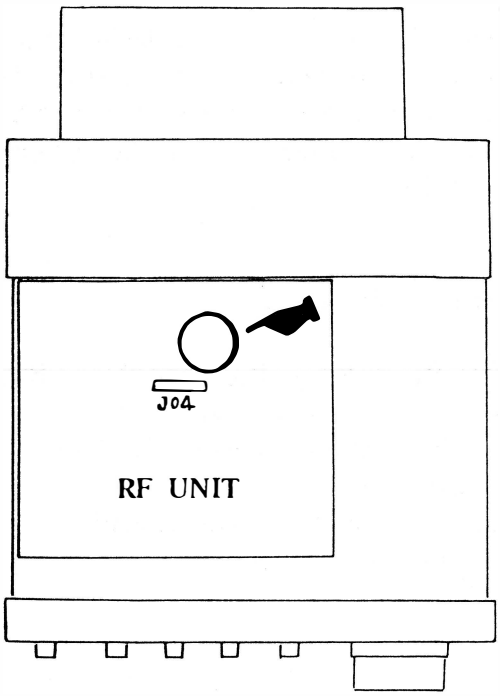

Figure 3-12

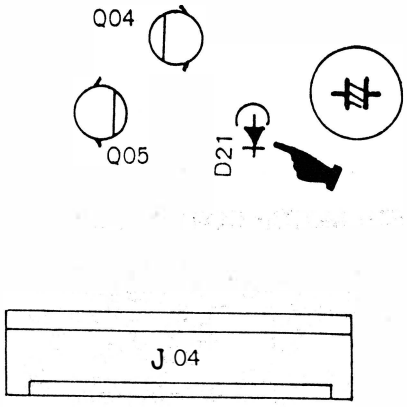

Figure 3-13A

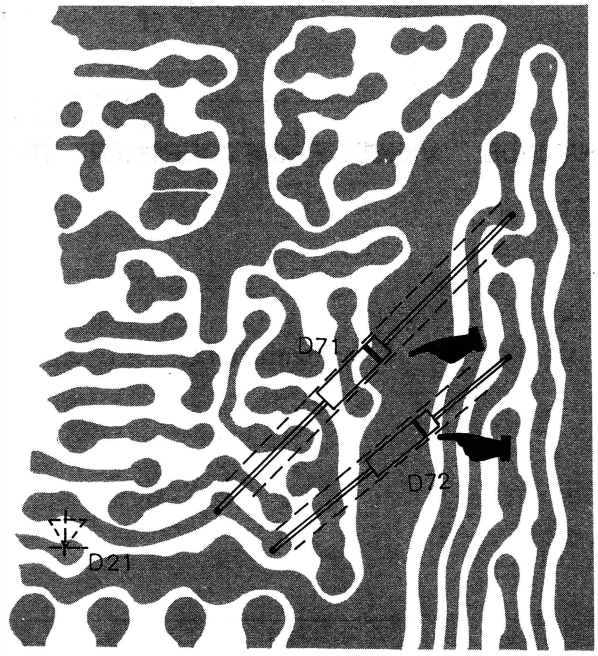

Serial Number
029999 & Down

Figure 3-13B

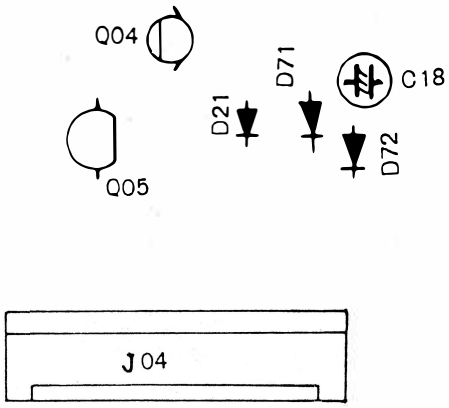

Serial Number
030001-039999

Figure 3-14

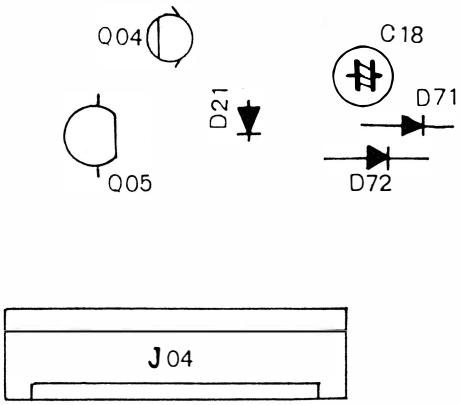

Serial Number
040001 & Up

Figure 3-15

COUNTER UNIT

The carrier points for USB, LSB and CW are preset as follows:

USB = 91.011.0
LSB = 91.014.0
CW or AM = 91.011.7

If for some reason, you wish to change the carrier points for LSB and USB, the counter preset frequency can be changed to within ±200 Hz of the desired frequency. Please refer to the Frequency Counter Preset Diode Connection Chart for details. This adjustment is carried out by connecting jumper wires on the counter unit.

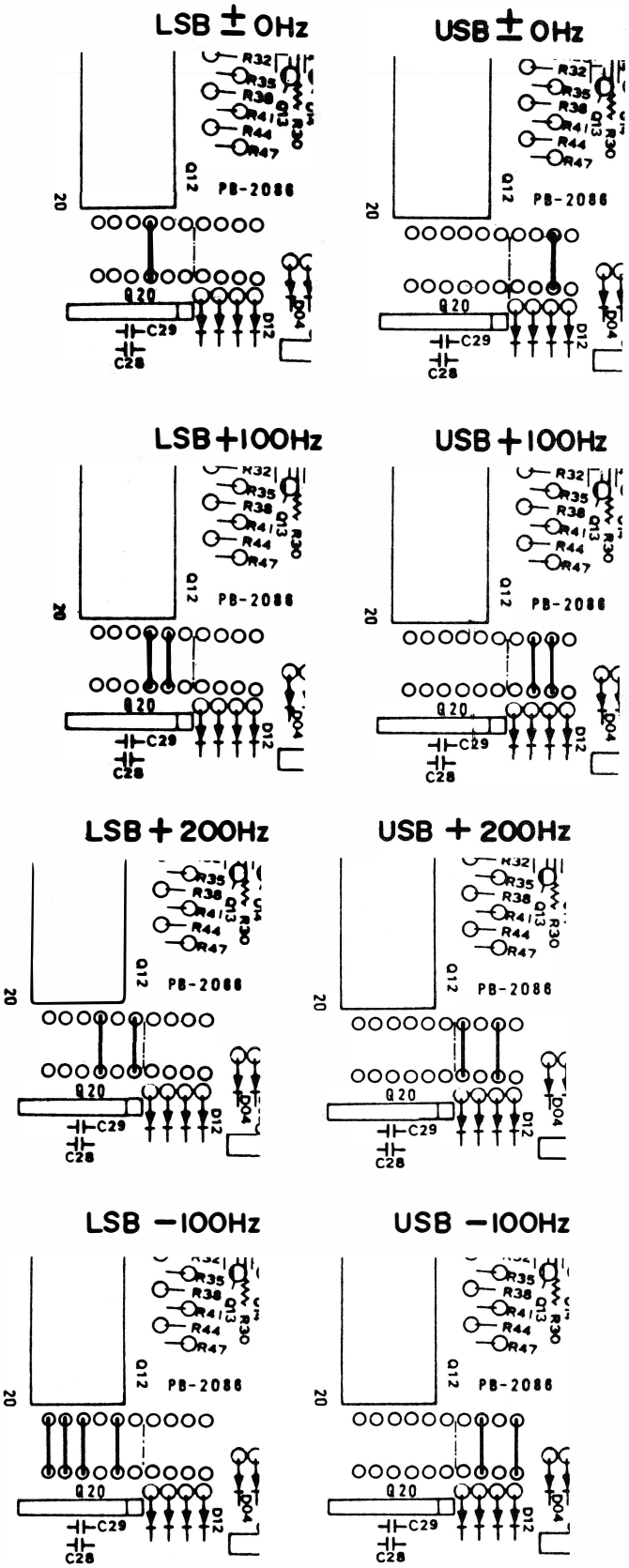

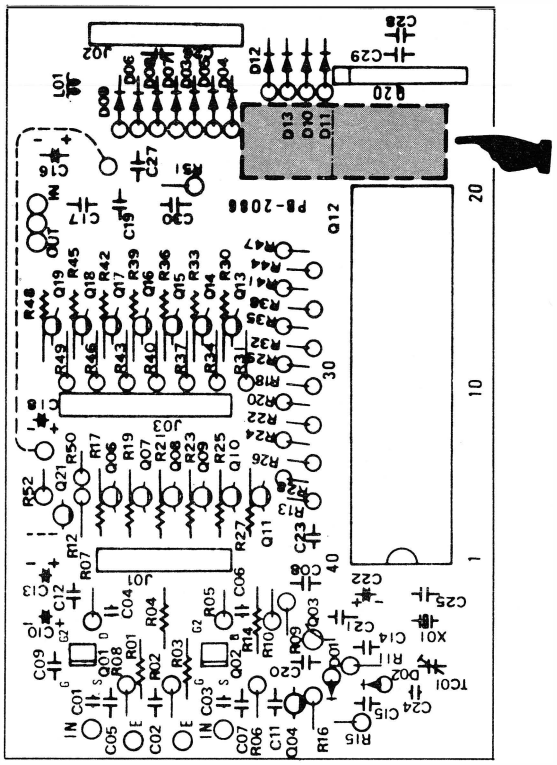

COUNTER UNIT

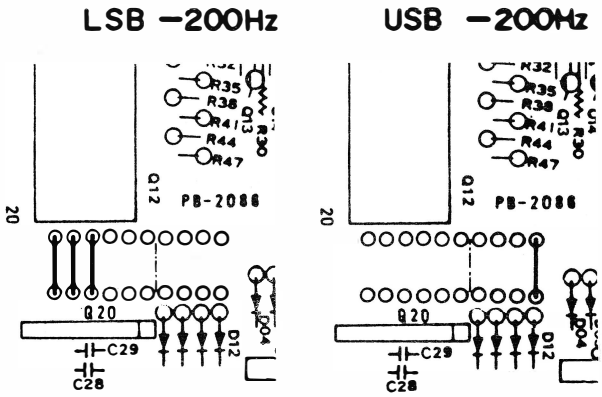

Figure 3-16

MEMO

MAINTENANCE AND ALIGNMENT

This transceiver has been carefully aligned and tested at the factory. With normal use, it should not require other than the usual attention given to electronic equipment.

Service or replacement of a major component may require substantial adjustment. Under no circumstances, though, should realignment be attempted unless the operation of the transceiver is fully understood, the malfunction has been carefully analyzed, and the fault has definitely been traced to misalignment. Sudden difficulties are almost always caused by component failure, rather than misalignment.

Service must be performed only by experienced personnel, using the proper test equipment.

EQUIPMENT REQUIRED

(1) RF Signal Generator: Hewlett-Packard Model 606A or equivalent, with one volt output at 50 ohms, and frequency coverage to 30 MHz.

(2) Vacuum Tube Voltmeter (VTVM): Hewlett-Packard Model 410B or equivalent, with an RF probe good to 40 MHz.

(3) Dummy Load: Yaesu Model YP-150Z or equivalent, with 50 ohm non-reactive load impedance, rated to 150 watts average power.

(4) AF Signal Generator: Hewlett-Packard Model 200 AB or equivalent.

(5) A general coverage receiver covering 3 to 30 MHz, with a 100 kHz crystal calibrator.

(6) Frequency Counter: Yaesu Model YC-500 or equivalent, with resolution to 0.01 kHz and frequency coverage to 30 MHz.

(7) Oscilloscope: Hewlett-Packard Model 1740A or equivalent.

NOTE REGARDING MEASUREMENT LEVELS

Where decibel levels are quoted in the following section (e.g. "Apply a 90 dB signal. . ."), the reference used is 0 dB = 1 μV. At 50 ohms, this level is equivalent to −107 dBm.

VOX ADJUSTMENT (VOX GAIN/ANTITRIP SETTING)

a) Set up the transceiver for reception on any band. Set the AF GAIN control for a comfortable listening level. The MODE switch should be set to LSB or USB.

b) Without closing the PTT switch, hold the microphone near your mouth, and speak in a normal voice into the microphone. Advance the VOX control until your voice activates the transmitter.

c) Without closing the PTT switch, hold the microphone near the speaker output. If the speaker audio causes the VOX to trip, adjust VR_{3003} (AF Unit) so that the speaker output does not activate the transmitter.

d) Now recheck the previous test using your voice to activate the VOX. Do not advance the VOX control nor VR_{3003} farther than necessary for proper performance, as confusing results will be obtained if these controls are advanced too far.

S-METER ALIGNMENT

a) Set the BAND switch to 20, the main tuning dial to 14.250 MHz, and the RF GAIN control fully clockwise.

b) Connect a signal generator to the antenna jack, and tune its output to the receiver frequency.

c) With no signal applied from the signal generator, adjust VR_{2003} (IF Unit) so that none of the LEDs on the level meter are illuminated. Do not go beyond the threshold point required for complete darkening of the entire line of LEDs.

d) Now apply a 90 dB signal from the signal generator, and adjust VR_{2004} (IF Unit) so that all 10 LEDs are illuminated.

AF UNIT ALIGNMENT POINTS

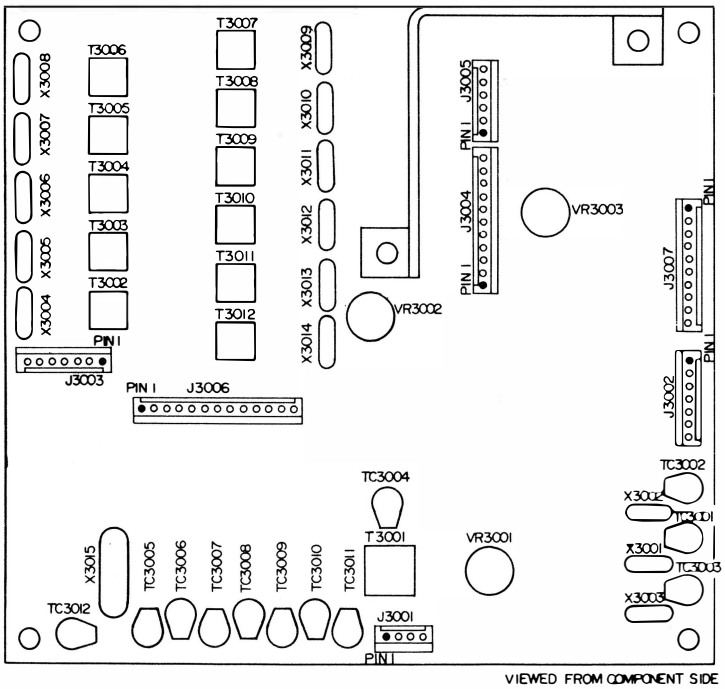

AF UNIT

CW SIDETONE LEVEL ADJUSTMENT

a) Adjust VR_{3002}, located on the AF Unit, for the desired CW sidetone level.

MARKER ALIGNMENT

a) Set the BAND switch to 30, and the MODE switch to AM. Adjust the AF GAIN control for a comfortable listening volume on the standard frequency station.

b) Push the MARK switch, and listen for evidence of a beat between the marker signal and the standard frequency station. If there is any beat note, adjust TC_{3012} (AF Unit) for a zero beat between the calibrator and the standard frequency station.

CARRIER POINT ALIGNMENT

a) Set the BAND switch to 20, the main dial to 14.250 MHz, and the MODE switch to LSB. Connect an audio oscillator to the microphone input, pin 8 of the mic jack.

b) Set the audio oscillator frequency to 1500 Hz, and its output level to 5 mV. Close the MOX switch, and advance the MIC control to achieve an output power of 60 watts as indicated on the dummy load/wattmeter.

c) Without changing any level settings, set the audio oscillator output frequency to 300 Hz, and adjust TC_{3001} (AF Unit) for a power output of 15 watts, as indicated on the dummy load/wattmeter.

d) Set the MODE switch to USB, and repeat the above procedure on USB.

e) Switch back and forth between USB and LSB. If there is any difference in the pitch of the background receiver noise, adjust the WIDTH control presetting as described below.

IF WIDTH ALIGNMENT

a) Set the front panel WIDTH control to the 12 o'clock position. Switch between LSB and USB, and adjust VR_{2002} (IF Unit) so that the background noise of the receiver is identical on both modes.

IF UNIT ALIGNMENT POINTS

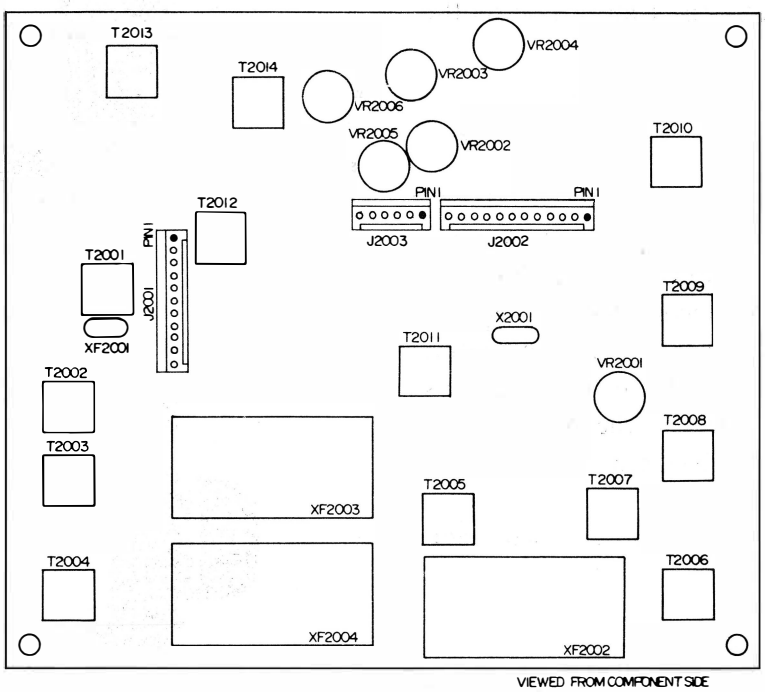

VIEWED FROM COMPONENT SIDE

IF UNIT

CARRIER BALANCE ADJUSTMENT

a) Set the BAND switch to 20, the main dial to 14.250 MHz, and the MODE switch to LSB. Set the MIC control fully counterclockwise, and remove all oscillator or other modulation sources from the mic input.

b) With an external receiver tuned to the FT-707 transmitting frequency, adjust VR_{3001} and TC_{3004} (AF Unit) for minimum signal indication on the external receiver with the MOX switch of the FT-707 closed.

c) Now set the MODE switch to USB, and check the results. Adjust VR_{3001} and TC_{3004} again, if needed, to assure optimum carrier nulling. Then check the LSB results again. Several passes may be necessary.

CW CARRIER POINT ALIGNMENT

a) Set the BAND switch to 20, the main dial to 14.250 MHz, and the MODE switch to CW.

b) Lightly couple the probe of a precision frequency counter to the coax cable between the antenna jack and the dummy load. Close the PTT switch, and close the key. Adjust TC_{3003} (AF Unit) so that the frequency on the counter is exactly the same as that on the digital display.

VFO UNIT

The VFO is very critical in its adjustment. As well, this is not an area which should require servicing. For this reason, we recommend that all cases of VFO repair be referred to a Yaesu service center. Cases of VFO instability or drift can almost always be traced to a fault elsewhere in the system, such as instability in a supply voltage, etc.

From a service standpoint, however, two components are of interest:

TC_{4301} is the band set trimmer.
TC_{4302} is the VFO output level adjustment trimmer.

To confirm proper VFO injection, connect the RF probe of the VTVM to TP_{1003} (RF Unit). Adjust TC_{4302} for a reading of 50 mV on the VTVM.

LOCAL OSCILLATOR CIRCUITS

(1) Premix Bandpass Filter Adjustment

a) Connect a jumper between TP_{1002} and TP_{1003} (RF Unit). Connect a sweep generator at that point. Connect the oscilloscope (through a detector) to TP_{1001} (RF Unit).

b) Refer to Table 3-3, and apply sweep on each band shown at the proper frequency. Adjust the cores of the transformers shown in Table 3-3 for the pattern shown in Figure 3-17.

c) Now connect the RF probe of the VTVM to TP_{1001}. Refer to Table 3-4, and adjust the cores shown for each band for a reading of 700 mV on each band.

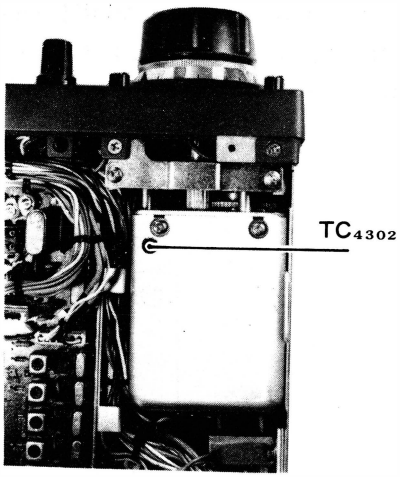

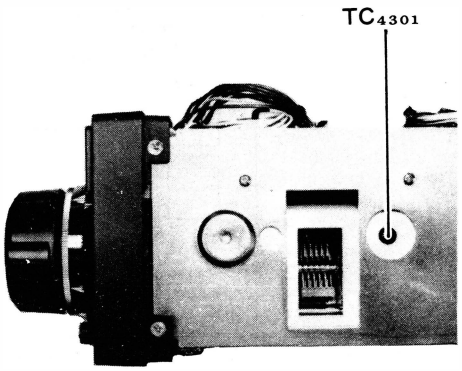

VFO

BAND	TRANSFORMER		PASS BAND MHz
80m	T_{1032}	T_{1031}	12.5–13.0
40m	T_{1034}	T_{1035}	16.0–16.5
30m	T_{1030}	T_{1031}	19.0–19.5
20m	T_{1036}	T_{1037}	23.0–23.5
17m	T_{1042}	T_{1043}	27.0–27.5
15m	T_{1038}	T_{1039}	30.0–30.5
12m	T_{1044}	T_{1045}	33.5–34
10m	T_{1040}	T_{1041}	37–39

Table 3-3

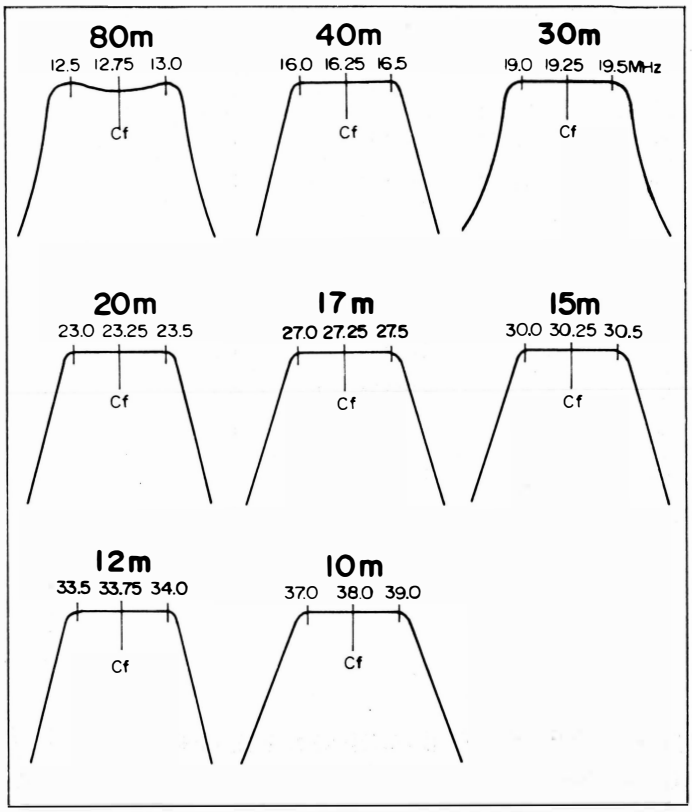

Figure 3-17 PREMIX BANDPASS FILTER

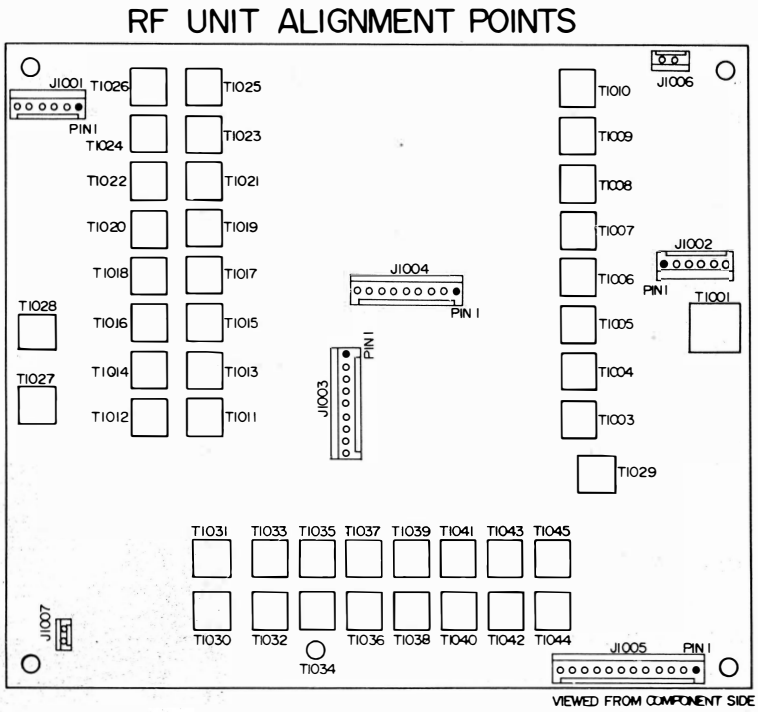

RF UNIT

BAND	CRYSTAL	FREQUENCY MHz	OSC OUTPUT TRANSFORMER
80m	X_{3005}	17.9845	T_{3003}
40m	X_{3006}	21.4845	T_{3004}
30m	X_{3004}	24.4875	T_{3002}
20m	X_{3007}	28.4875	T_{3005}
17m	X_{3013}	32.4875	T_{3011}
15m	X_{3008}	35.4875	T_{3006}
12m	X_{3014}	38.4875	T_{3012}
10mA	X_{3009}	42.4875	T_{3007}
10mB	X_{30010}	42.9875	T_{3008}
10mC	X_{3011}	43.4875	T_{3009}
10mD	X_{3012}	43.9875	T_{3010}

Table 3-4

BAND	TRANSFORMER	PASS BAND MHz
80m	T_{1013} , T_{1014}	3.5–4.0
40m	T_{1015} , T_{1016}	7.0–7.0
30m	T_{1011} , T_{1012}	10.0–10.5
20m	T_{1017} , T_{1018}	14.0–14.5
17m	T_{1023} , T_{1024}	18.0–18.5
15m	T_{1019} , T_{1020}	21.0–21.5
12m	T_{1025} , T_{1026}	24.5–25.0
10m	T_{1021} , T_{1022}	28.0–29.7

Table 3-5

ANTENNA COIL/RF BANDPASS FILTER ALIGNMENT

(1) Antenna Coil Adjustment

a) For each band to be aligned, set the main tuning dial to the center of the band. For example, on 14 MHz, use 14.250 MHz, and on 10 meters use 29.0 MHz.

b) Activate the marker generator, and adjust the coils shown below for maximum deflection on the S-meter when tuned to the marker signal.

80	T_{1004}
40	T_{1005}
30	T_{1003}
20	T_{1006}
17	T_{1009}
15	T_{1007}
12	T_{1010}
10	T_{1008}

(2) RF Bandpass Filter Adjustment

a) Connect an RF sweep generator to the antenna jack, and connect your oscilloscope to the lead of R_{1050} (RF Unit) as shown in the drawing.

b) Adjust the transformers shown in Table 3-5 for the pattern shown in Figure 3-18.

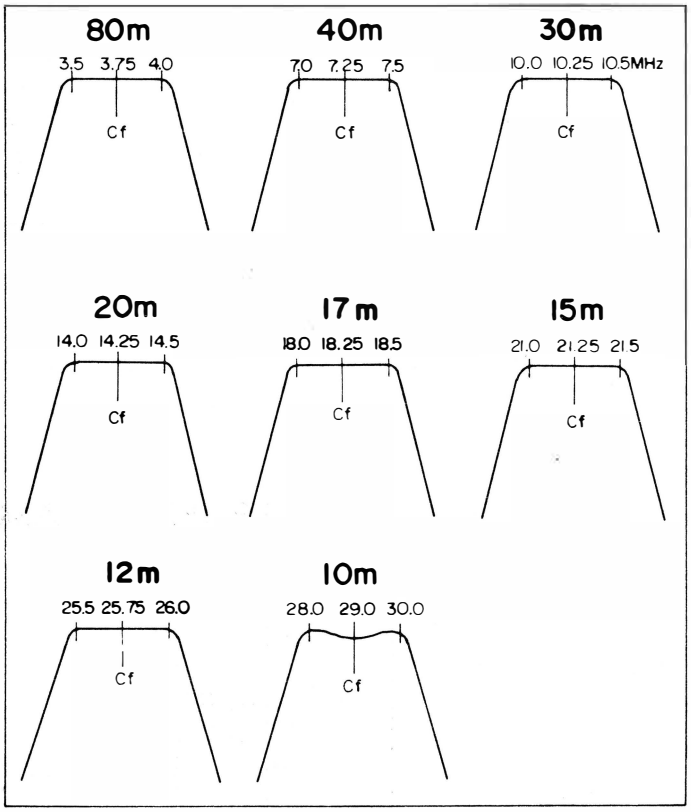

Figure 3-18 RF BANDPASS FILTER

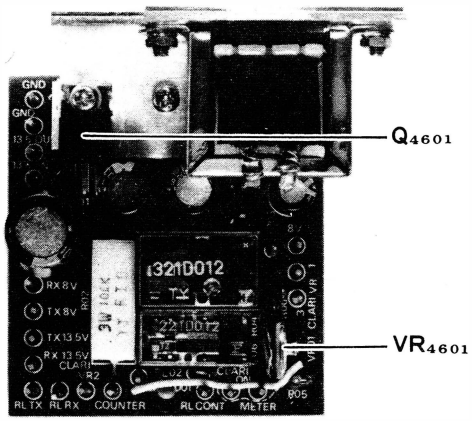

AVR UNIT

ANTENNA TRAP COIL ALIGNMENT

a) Set the BAND switch to 40, and set the main tuning dial to 7.5 MHz. Connect an audio voltmeter to the speaker jack.

b) Connect a signal generator to the antenna jack, and apply a 100 dB signal at 8.9875 MHz. Adjust T_{1001} (RF Unit) for minimum indication on the audio voltmeter.

CLARIFIER ALIGNMENT

a) On any band, apply a signal from the signal generator, and tune the receiver to the output from the signal generator. If desired, you may use the marker signal instead of a signal generator. With the clarifier OFF, note the beat tone of the incoming signal, with the MODE switch set to CW.

b) Set the CLAR control to the 12 o'clock position. Push the CLAR switch, and listen for any difference in the beat tone of the incoming signal. If the tone is not exactly the same as with the clarifier OFF, adjust VR_{4601} (AVR Unit) for the required coincidence of tones in the ON and OFF conditions.

PO METER SETTING

a) Set the BAND switch to 20, and the MODE switch to CW. Close the MOX switch and the CW key, and set the transmitter power output to 110 watts, as indicated on the wattmeter.

b) Adjust VR_4 (main chassis) so that exactly two of the yellow LEDs are illuminated.

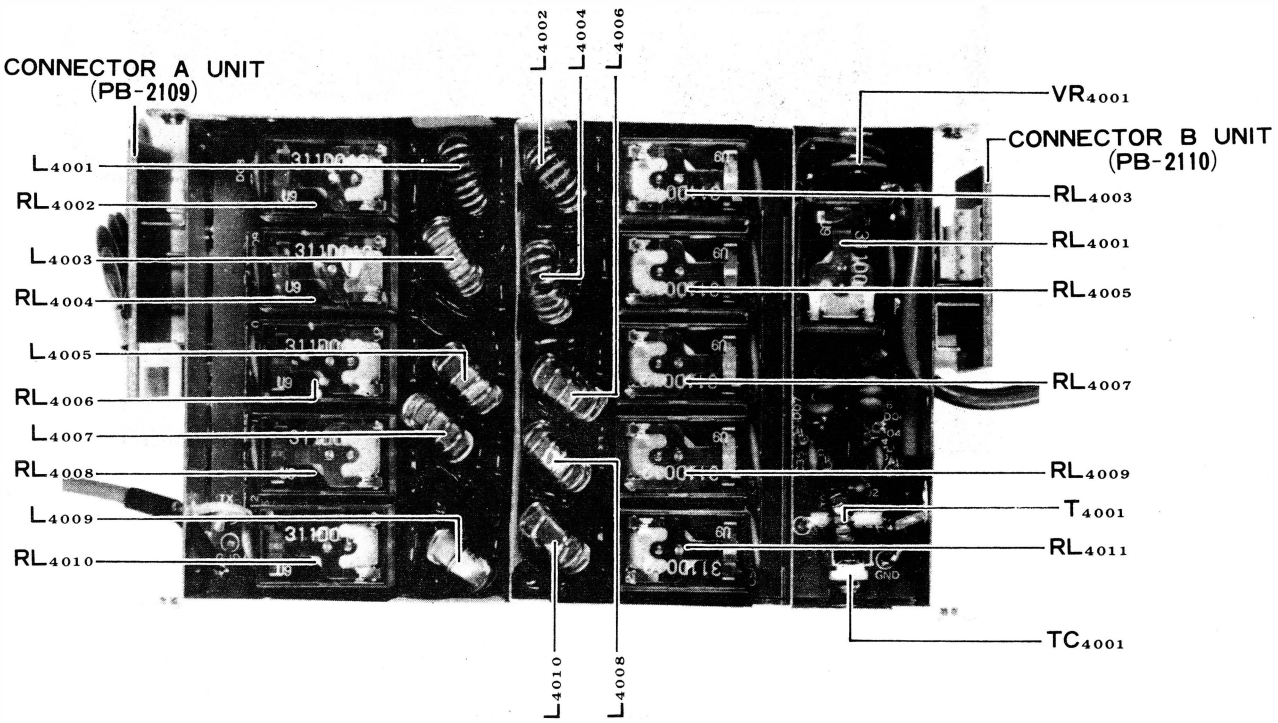

LPF UNIT

DIRECTIONAL COUPLER BALANCE

a) Set the BAND switch to 15, and the MODE switch to CW. Connect the MINUS (–) lead of your DC voltmeter to the center post of VR_{4001} (connect the positive lead of the voltmeter to ground).

b) Transmit on CW, and adjust TC_{4001} for a minimum indication on the voltmeter.

ALC CIRCUIT ALIGNMENT

a) Set the MODE switch to CW. On each band, check the maximum power output. Set VR_{2005} for a maximum power output of 110 watts. Use a 50 ohm dummy load for this step.

b) Connect a 17 ohm load to the antenna jack (three 50 ohm dummy loads connected in parallel). Transmit on 20 meter CW, and adjust VR_{4001} for a maximum power output of 50 watts as indicated on the wattmeter.

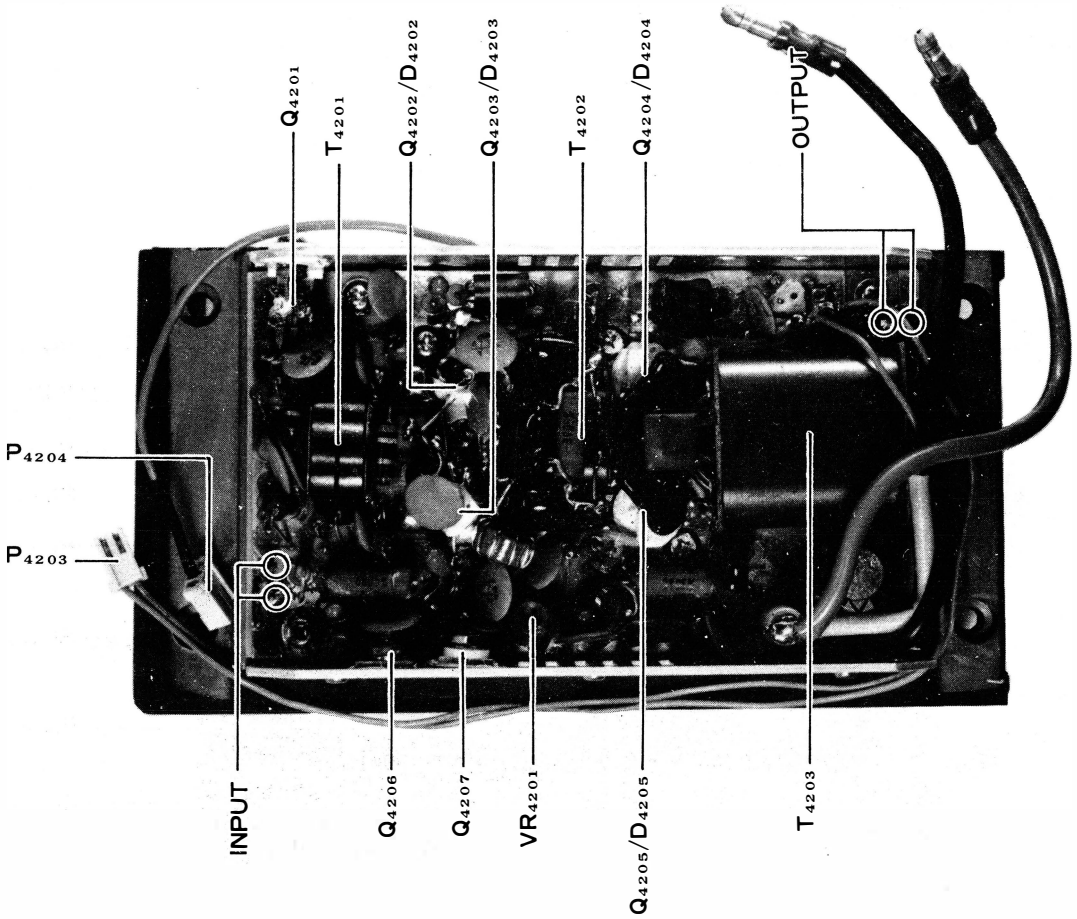

100W PA UNIT

FAULT IDENTIFICATION AND LOCALIZATION

The process of troubleshooting any electronic equipment is highly individualistic. Fundamentally, though, the process is one of logical elimination.

Begin with a visual inspection of the transceiver, looking for broken, discolored, or charred components. Smell the unit, as transformers smell differently than resistors, etc. If you **do** find a component that is cooked, remember that another fault may have caused the destruction of the part you have located.

Initially, turn on the receiver, and check out **only** the RX side. Any malfunctions you detect on the receiver side should be repaired before you check out the transmitter. In doing this, you may well cure the entire problem, as much circuitry is shared on TX and RX.

The logical process of fault identification is to determine the missing function (no RX on LSB), then the board at fault (AF UNIT), then the bad circuit (LSB oscillator), then the malfunctioning part (X_{3002}).

If, after the receiver inspection is completed, all appears OK, switch to the transmit side, following the same logical procedure (function – board – circuit – component). Concentrate on those sections unique to the transmit side, as you have already performed a thorough checkout of all receiver and shared circuits. Use only a dummy load. NEVER troubleshoot using an antenna.

In this manual, we will provide troubleshooting advice which leads you directly to suspect components. As there are some 2,200 parts in the FT-707, though, it obviously is impossible for us to trace the path of every possible malfunction in the radio. Therefore, if our tips do not lead to identification of the trouble, the logical elimination process is the way to go.

TROUBLESHOOTING

A FUNDAMENTAL ANALYSIS OF THE TROUBLE

The failure may be caused by one of the following:

1) Mechanical defect
2) Electrical defect
3) Others (Murphy's Law, etc.)

1. MECHANICAL DEFECTS

Typical examples of mechanical defects encountered by the technician are:

a) Damage from shock during transportation (remember the unit was probably subjected both to sea and truck shipment).
b) Damage caused by vibration in service.
c) Damage caused by forcing stubborn knobs or switches. This difficulty is usually preceded by one of the two above defects.

2. ELECTRICAL DEFECTS

Typical electrical defects encountered are:

a) Part(s) failure caused by aging;
b) Failures caused by improper application of supply voltage or by voltage spikes;
c) Improper operation (e.g. transistors without load – this usually points to a failure elsewhere, in addition to the damaged transistor or IC).
d) Loose connections, at the power receptacle, caused by cold solder joints, etc.

3. OTHERS

Among the miscellaneous types of failures or difficulties encountered are:

a) Antenna troubles – be on the alert for antenna problems when the owner of the just-aligned transceiver complains of difficulty "when I switch to the antenna."
b) Poor power source – extremely high or low voltage, insufficient capacity, poor regulation, etc.
c) Murphy's Law – use of a non-Yaesu microphone with different connections, for example. (See page 1-7.)

RECEIVE MODE

Problem	Condition	Probable Cause(s)
(1) No DC power applied	(a) Fuse OK	★ Defective power switch ★ Defective D_{01}, D_{02} ★ Defective RL_{01} ★ Loose contact at power jack
	(b) Fuse blows	★ Defective power connector J_{08} ★ Short at CH_{01} ★ +13.5 V line shorted
(2) No reception	(a) S-meter OK, no audio output from speaker	★ Defective speaker ★ Defective EXT SP jack ★ Defective audio circuit around Q_{3022} ★ Defective LPF circuit around Q_{3020}, Q_{3021}
	(b) No audio output on some mode LSB USB/CW AM LSB/USB/CW	 ★ Defective D_{3004}, X_{3001} ★ Defective D_{3005}, X_{3002} ★ Defective Q_{2018}, D_{2023} and associated circuit ★ Defective RL_{3001}
	(c) No audio output, S-meter off scale	★ Defective RF GAIN control ★ Defective Q_{2007} ★ AGC line shorted
	(d) AF circuit appears OK, no S-meter deflection	★ Defective T_{3001} ★ Defective T_{2008} –T_{2010} ★ Defective Q_{2004}, Q_{2005} ★ Defective T_{2001} –T_{2004} ★ Defective Q_{2001} –Q_{2003}, Q_{2009} ★ Defective D_{2001} –D_{2003} ★ Defective Q_{2014} ★ Defective D_{2009} –D_{2016}, D_{2030}, D_{2031} ★ Defective XF_{2001} –XF_{2004} ★ Detuned or defective T_{2001} –T_{2010} ★ Defective Q_{1008}, Q_{1009} ★ No local signal
(3) Partial reception	(a) Poor reception on one or more bands (some bands OK)	★ Low local signal level ★ Check tuning of the bandpass filter T_{1003} –T_{1026} (*T_{1001} –T_{1018}) ★ Bandswitched control line open or shorted

(4) Self-oscillation	(a) OK on transmit	★ TX 13.5 V line shorted to RX 13.5 V line ★ Check TX line at each board, TX/RX switching diodes, and switches
(5) Marker inoperative	(a) RX OK, no marker signal heard	★ Defective MARKER switch ★ Check voltage at pin 14 of Q_{3037} ★ Defective X_{3015} ★ Defective Q_{3036} –Q_{3038}

TRANSMITTER

Problem	Condition	Probable Cause(s)
(1) No power output	(a) No power output	★ Loose contact at J_{1002} ★ Loose contact at J_{4002} ★ Defective RL_{4001} –RL_{4011} ★ Cold solder joint at band switch ★ Defective Q_{1002}, Q_{1003} ★ Defective Q_{1004}, Q_{1005}, and associated circuit ★ Defective RX/TX switching diodes on RF Unit PB-2093 (*PB-2201) ★ Defective Q_{1008} ★ Low premix local signal level ★ Defective Q_{2007}, Q_{2008}
(2) Poor TX performance	(a) No power output on LSB/USB and no modulation on AM mode	★ Defective microphone ★ Loose contact at microphone connector ★ Defective Q_{3006}, Q_{3007}, Q_{3009} ★ Defective MIC GAIN control ★ Defective RL_{3001}
	(b) No power output on LSB only	★ Defective D_{3004}, X_{3001}, TC_{3001} ★ Loose contact at pin 7 of J_{3002}
	(c) No power output on USB only	★ Defective D_{3005}, X_{3002}, TC_{3002} ★ Loose contact at pin 6 of J_{3002}
	(d) No power output on CW/AM	★ Defective Q_{3002}, Q_{3003}, Q_{3039}, and associated circuit ★ Defective D_{3006}, X_{3003}, TC_{3003}
	(e) No CW keying	★ Defective key jack ★ Defective Q_{1004}, Q_{1005}
(3) No changeover from RX to TX	(a) TX OK in MOX position	★ Failure in MIC or PTT line ★ Loose MIC jack or plug connection
	(b) No TX in MOX position	★ Defective Q_{3019}, Q_{3040}, D_{3017}, D_{3043}
	(c) VOX inoperative	★ Defective Q_{3015} –Q_{3017}, Q_{3013} ★ If no CW semi-break-in, check Q_{3010} and associated circuit
(4) No return to RX from TX		★ PTT line grounded ★ Defective Q_{3019} and associated circuit ★ Defective VOX circuit

(5) Fuse blows on transmit	(a) OK on RX	★ Defective PA unit ★ TX 13.5 V line grounded
(6) Abnormal meter operation	(a) Meter does not deflect at all	★ Defective D_{4701} –D_{4710} ★ Defective RL_{4602} ★ Defective Q_{4701}
	(b) S-meter does not function	★ AGC line shorted ★ Defective Q_{2018} , Q_{2019} , Q_{2020} , Q_{2021}
	(c) ALC meter does not function	★ Defective Q_{2020} –Q_{2025} ★ Defective D_{4002} –D_{4007} , T_{4001}

COMMON CIRCUITS

Problem	Condition	Probable Cause(s)
(1) Local Unit	(a) Crystal oscillator does not oscillate	★ Cold solder joint between band switch and J_{3006} ★ Defective Q_{3025} –Q_{3035} ★ Defective X_{3004} –X_{3014} ★ Defective T_{3002} –T_{2012} ★ Defective D_{3029} –D_{3039}
	(b) No premix local output	★ Defective Q_{1006} ★ Detuned or defective premix BPF T_{1030} –T_{1045} (*T_{1037} –T_{1052}) ★ Defective D_{1046} –D_{1061} (*D_{1059} –D_{1074}) ★ Defective Q_{1010} –Q_{1012} ★ No VFO output
(2) Counter Unit	(a) Digital display does not work	★ Defective voltage regulator Q_{01} ★ Defective display LED ★ Defective Q_{4406} –Q_{4411}, Q_{4413} –Q_{4419} ★ Defective Q_{4412}
	(b) Display incorrect	★ Low premix local signal input ★ Defective Q_{4401}, Q_{4403}, Q_{4404} ★ Defective Q_{4412} ★ Defective Q_{1013}
(3) Clarifier	(a) Frequency jumps with clarifier on	★ Defective CLAR control, RL_{4602}
	(b) OFF and "0" condition do not coincide in frequency	★ Defective CLAR control, VR_{4601}, RL_{4602}
	(c) Frequency jumps with clarifier off, OK with clarifier on	★ Defective VR_{4601}, RL_{4602}

RELAY CONNECTION INFORMATION

Should the need for replacement of relays become necessary, or if you are trying to verify proper relay operation, the diagrams below should help you.

RL2001
RL3001
FBR211AD012-M

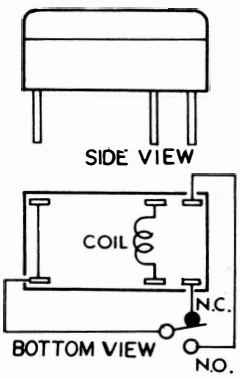

RL-1
FRL-263D012/02CK-0E

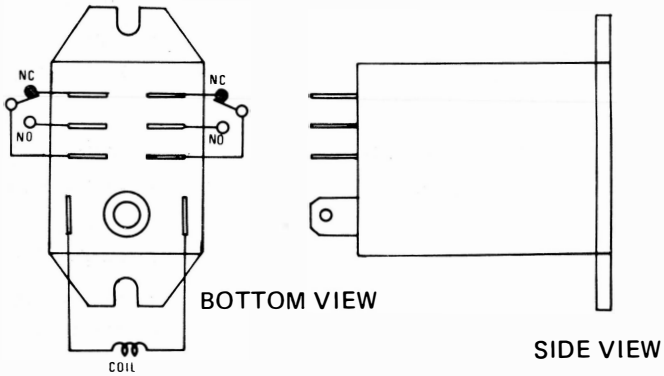

RL4602
FBR221D012

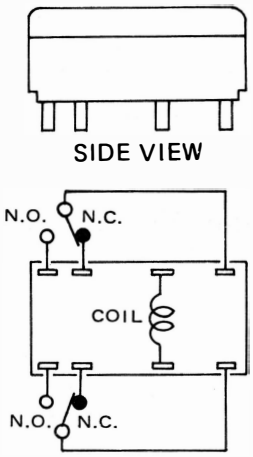

RL4601
FBR321D012

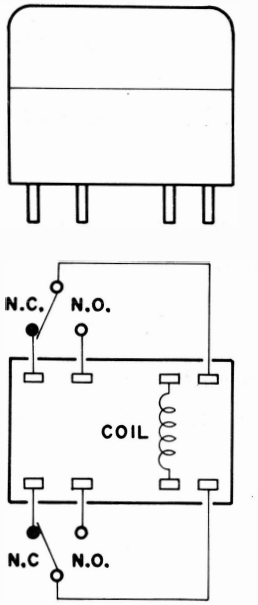

RL4001–RL4011
FBR311D012

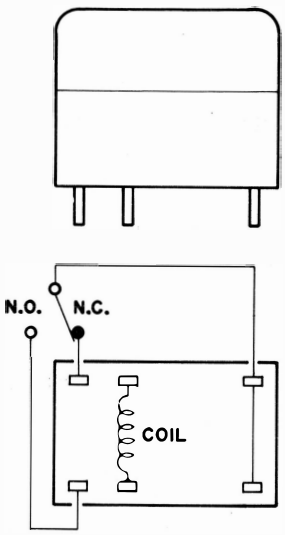

PARTS LAYOUT
RF UNIT(PB-2093A) Early model

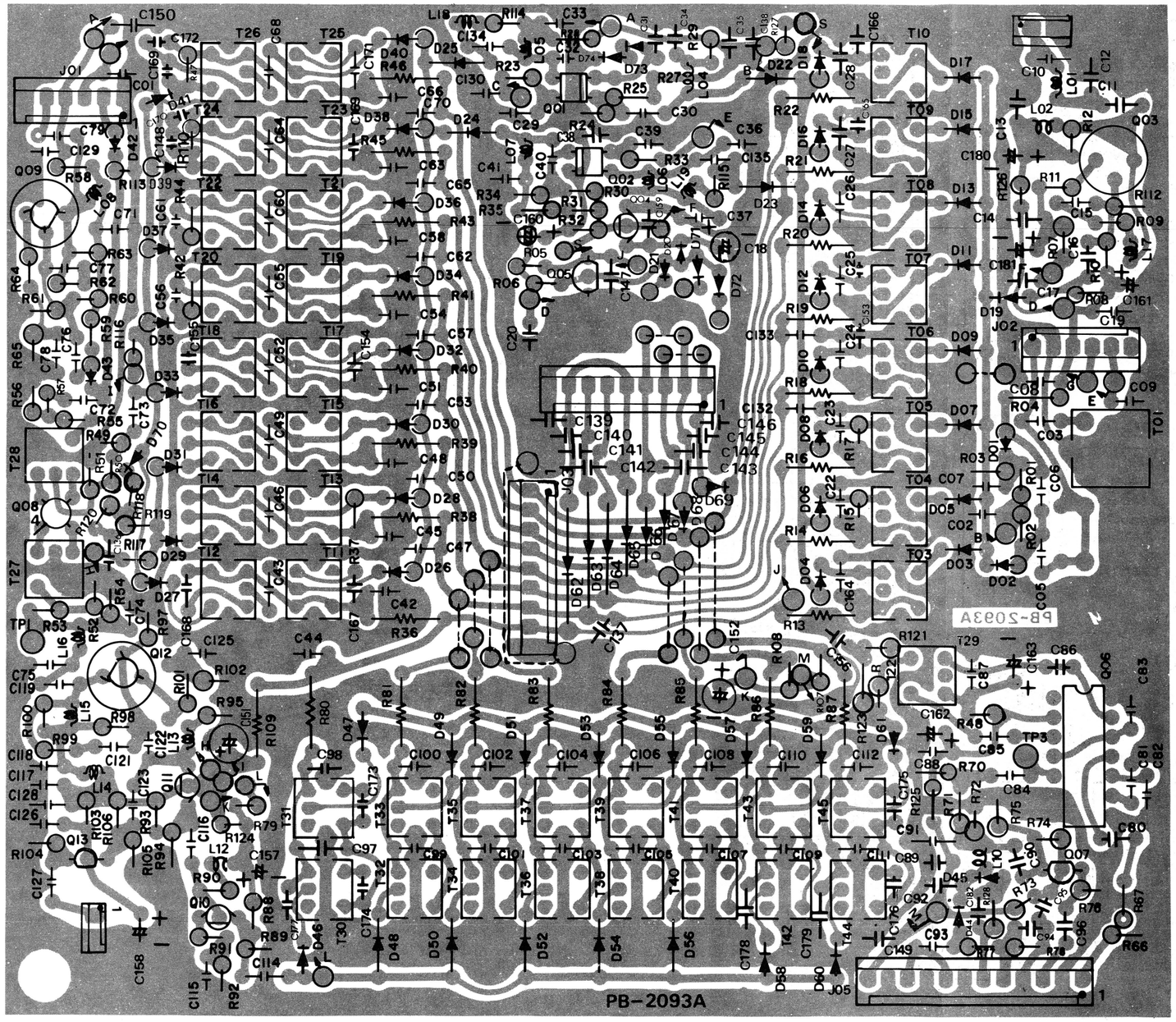

Viewed from component side

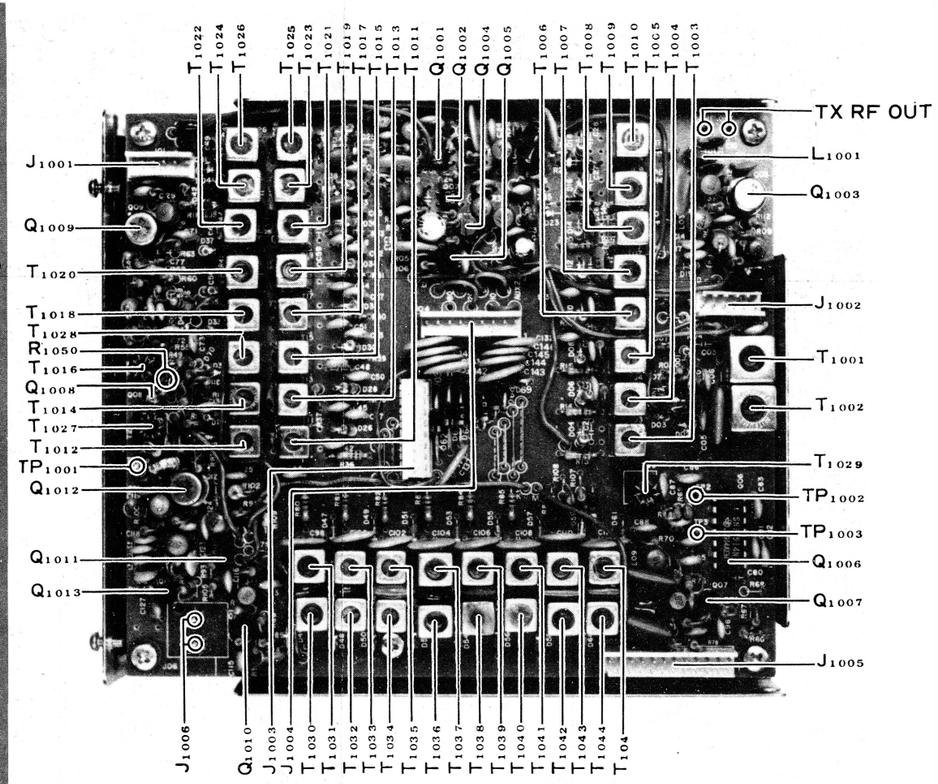

RF UNIT

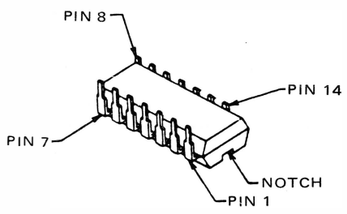

SN76514N

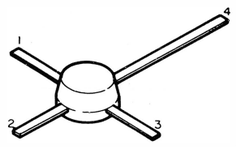

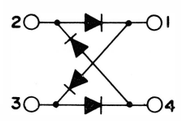

ND487C2-3R

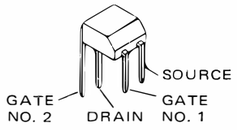

3SK73

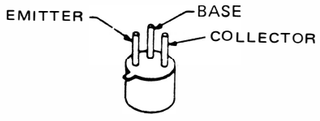

2N4427

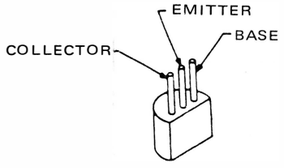

2SC2407

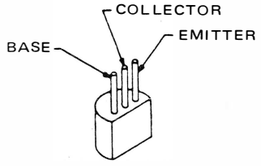

2SC380TM-Y
2SC1815-Y/GR
2SC1923R
2SC1959-Y

PARTS LAYOUT
RF UNIT(PB-2093A) Early model

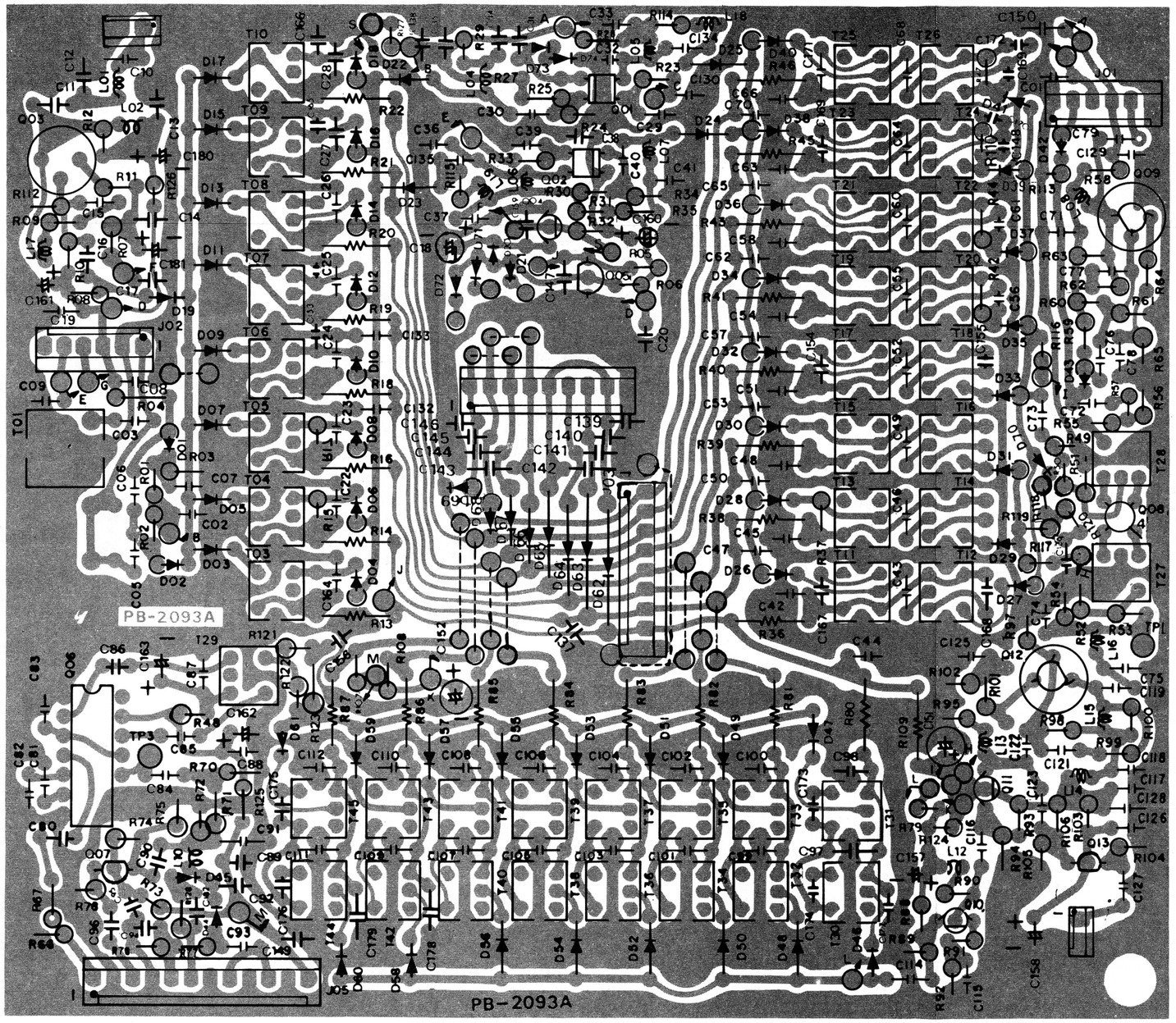

Viewed from foil side

VOLTAGE CHART
(DC VOLTS)

FT-707 RF UNIT (PB-2093)

	E(S)	C(D)	B(G1)	(G2)	
Q1001	1.5	11.3	1.6	2.4	R
Q1002	1.3	11.8	1.1	2.2	T
Q1003	5.4	12.7	6.2		T
Q1004	0	0.2	0.7		T
Q1005	0	1.5	0		T
Q1007	2.4	10.8	3.1		R
Q1009	6.5	12.0	7.1		R
Q1010	1.5	10.1	2.2		R
Q1011	1.5	10.3	2.2		R
Q1012	2.8	13.3	3.5		R
Q1013	3.3	6.1	4.0		R

	1	2	3	4	5	6	7	8	9	10	11	12	13	14	
Q1006	0	12.3	10.5	6.1	3.9	0	0	0	3.9	6.1	6.1	6.1	10.4	0	R

BAND	20m
MODE	USB
RF GAIN	MAX
NB	OFF
AGC	SLOW

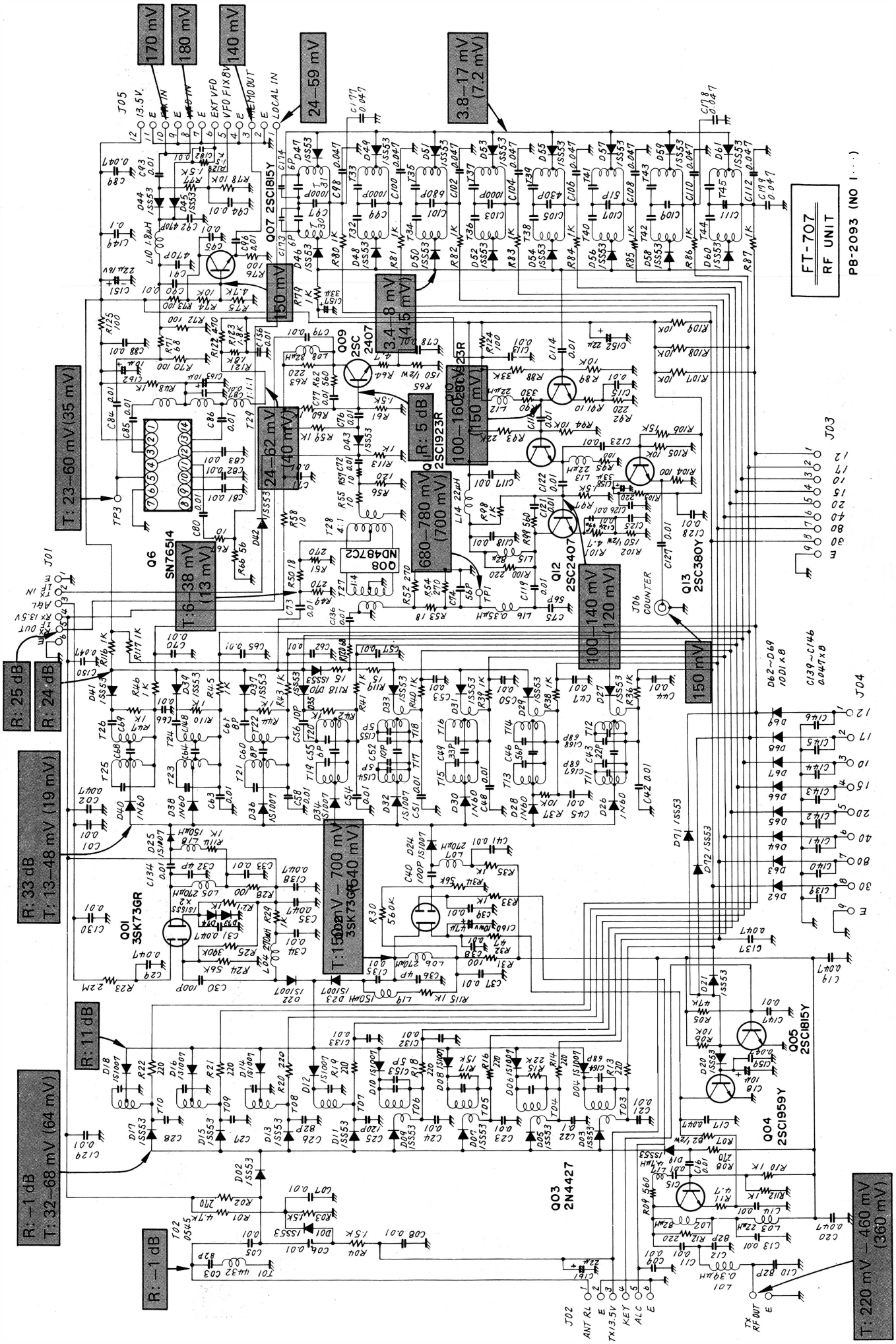
FT-707
RF UNIT
PB-2093 (NO 1 ...)
170 mV
180 mV
140 mV
24–59 mV
3.8–17 mV (7.2 mV)
150 mV
3.4–8 mV (4.5 mV)
T: 23–60 mV (35 mV)
24–62 mV (40 mV)
R: 5 dB
100–160 mV (150 mV)
680–780 mV (700 mV)
T: 6–38 mV (13 mV)
100–140 mV (120 mV)
150 mV
R: 25 dB
R: 24 dB
R: 33 dB
T: 13–48 mV (19 mV)
T: 150 mV – 700 mV (640 mV)
R: 11 dB
R: –1 dB T: 32–68 mV (64 mV)
R: –1 dB
T: 220 mV – 460 mV (360 mV)
Q07 2SC1815Y
Q09 2SC 2407
Q10 2SC1923R
Q6 SN76514
Q08 ND4872
Q12 2SC2407
Q13 2SC380Y
Q01 3SK73GR
Q05 2SC1815Y
Q04 2SC1959Y
Q03 2N4427
J05
J03
J04
J01
J02
J06 COUNTER
TX RF OUT
ANT RL
TX 13.5V
KEY
ALC

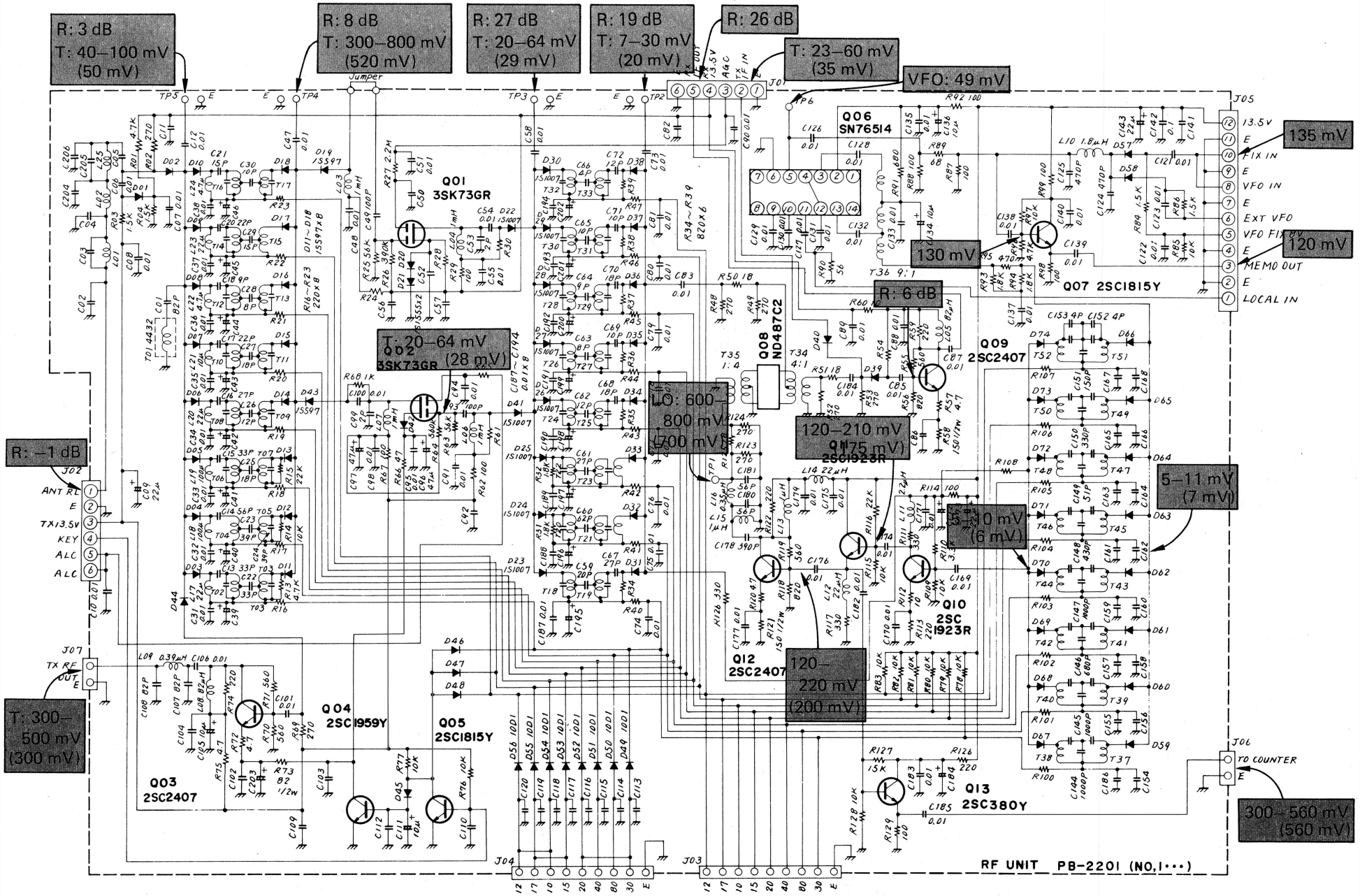

NOTES

1. ALL RESISTORS ARE 1KΩ UNLESS OTHERWISE NOTED
2. ALL CAPACITORS ARE 0.047μF UNLESS OTHERWISE NOTED
3. ALL ELECTOLYTIC CAPACITORS ARE 33μF OTHERWISE NOTED
4. ALL DIODES ARE 1SS53 UNLESS OTHERWISE NOTED

FT–707

RF UNIT

PARTS LAYOUT

RF UNIT(PB-2201) After prod.11.

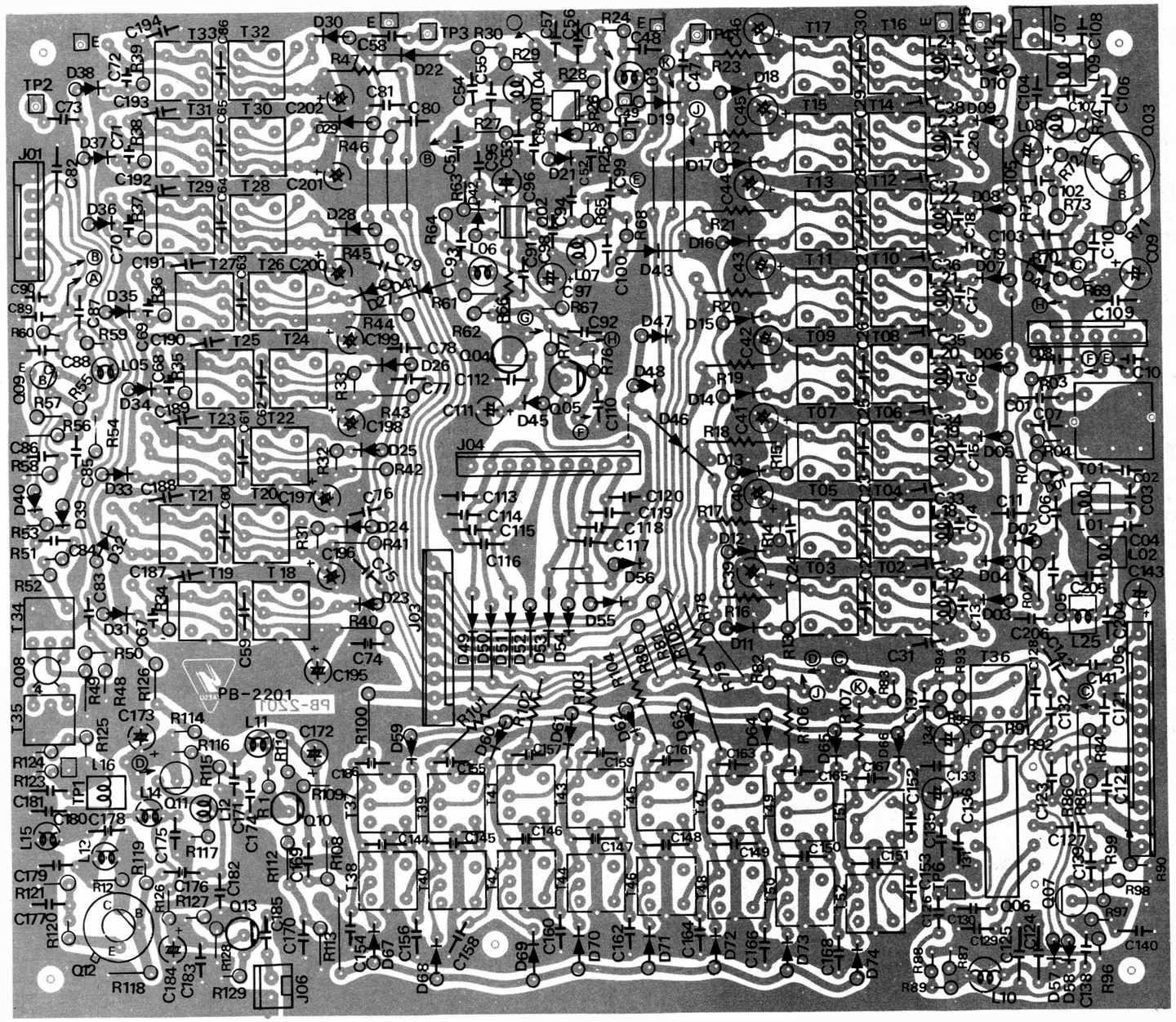

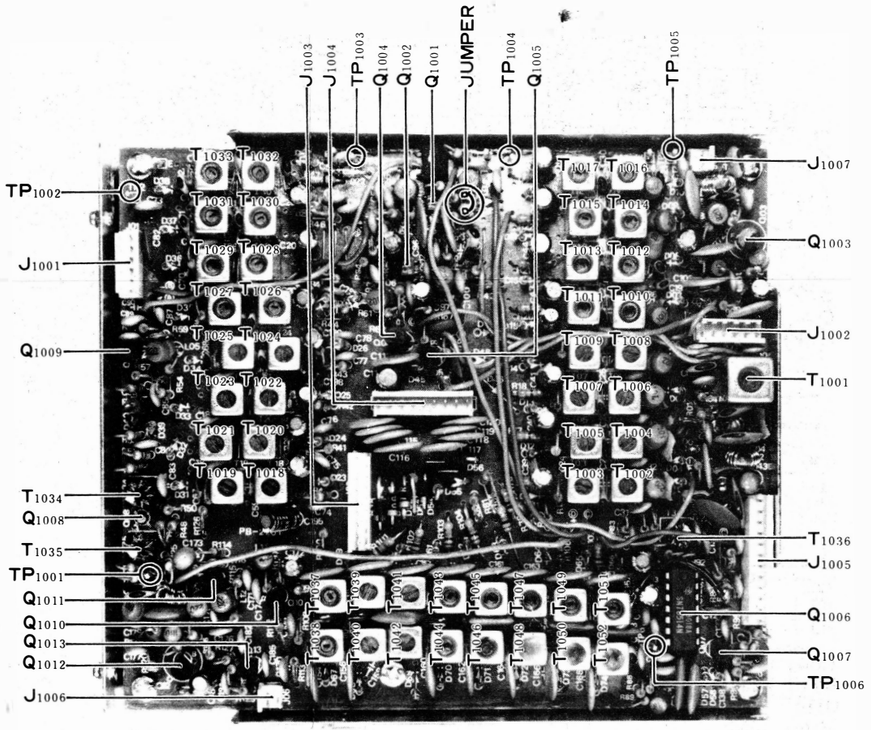

Viewed from component side

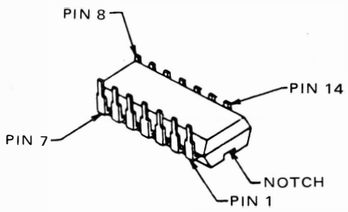

SN76514N

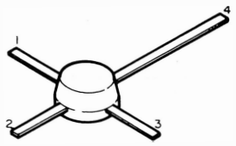

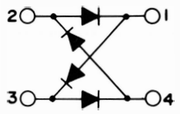

ND487C2-3R

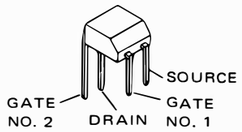

3SK73

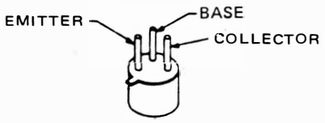

2N4427

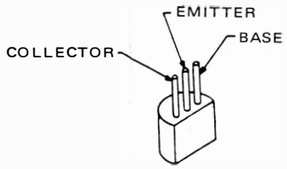

2SC2407

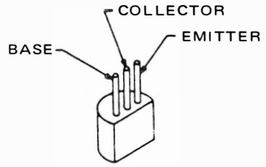

2SC380TM-Y
2SC1815-Y/GR
2SC1923R
2SC1959-Y

PARTS LAYOUT

RF UNIT(PB-2201) After prod.11.

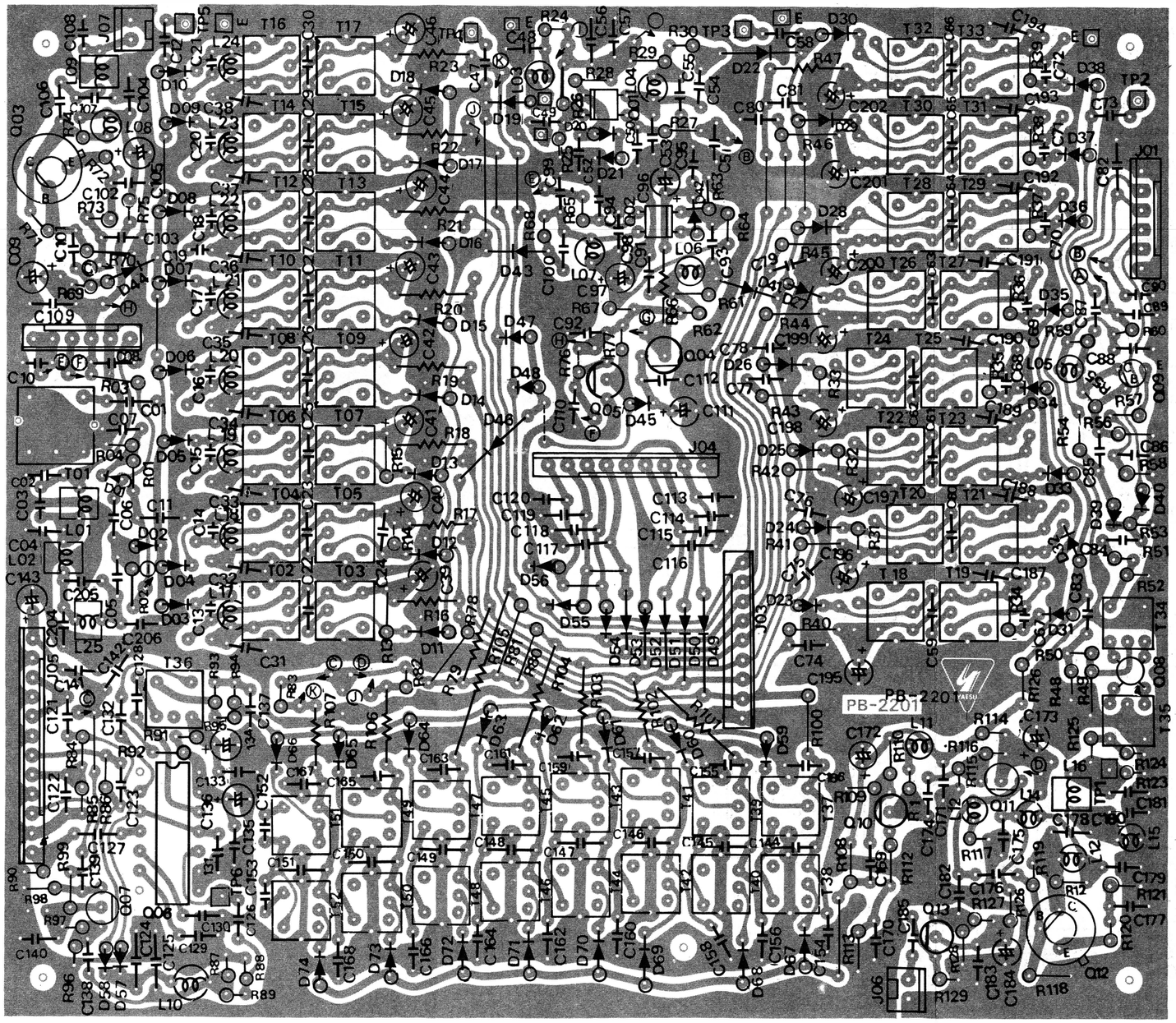

Viewed from foil side

VOLTAGE CHART

(DC VOLTS)

FT-707 RF UNIT (PB-2201)

	E(S)	C(D)	B(G1)	(G2)	
Q1001	1.6	11.6	1.5	2.5	R
Q1002	1.2	11.8	1.1	2.2	T
Q1003	5.4	12.7	5.9	–	T
Q1004	0	0.2	0.74	–	T
Q1005	0	1.5	0	–	T
Q1007	2.3	10.8	3.0	–	R
Q1009	6.2	12.0	6.9	–	R
Q1010	1.4	9.9	2.2	–	R
Q1011	2.7	13.4	3.4	–	R
Q1012	7.0	13.3	7.6	–	R
Q1013	2.2	8.5	2.8	–	R

	1	2	3	4	5	6	7	8	9	10	11	12	13	14	
Q1006	0	12.6	10.6	6.0	3.8	0	0	0	3.8	6.0	6.0	6.0	10.6	0	R

BAND	20m
MODE	USB
RF GAIN	MAX
NB	OFF
AGC	SLOW

PARTS LAYOUT
IF UNIT(PB-2094A)

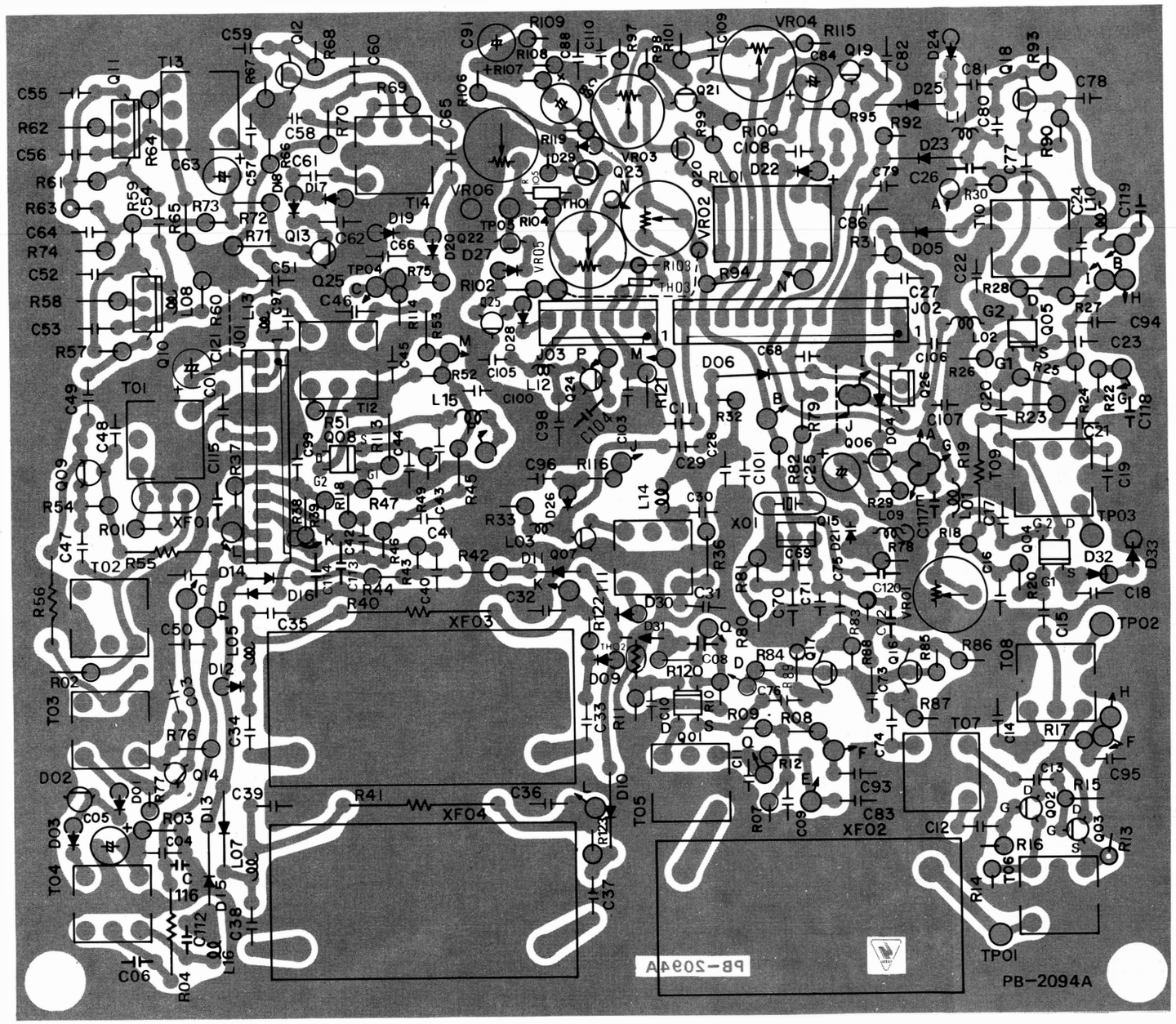

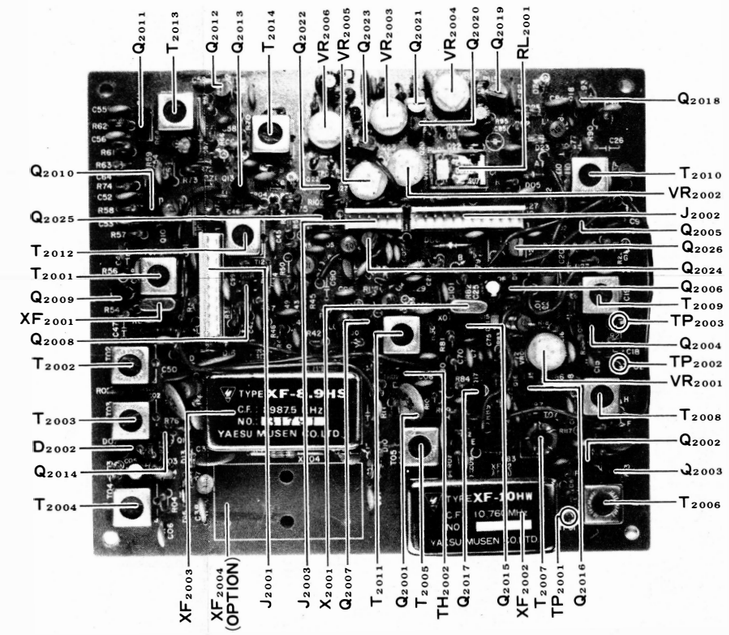

IF UNIT

Viewed from component side

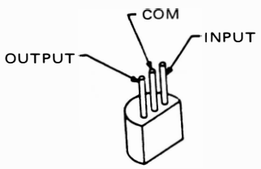

μPC78L08

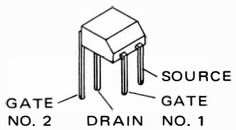

3SK73GR

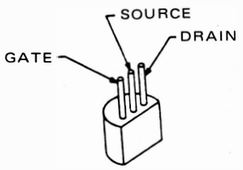

2SK19TM-GR

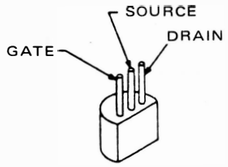

J310

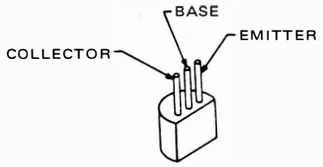

MPSA13

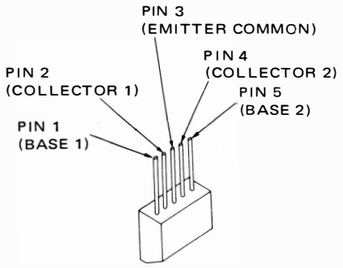

2SC1583

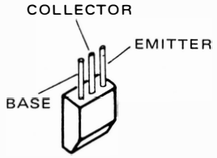

2SC535A

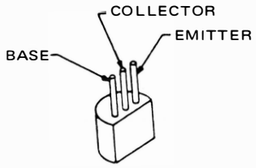

2SA733(A)P/Q
2SC1815Y/GR
2SC1959Y

PARTS LAYOUT
IF UNIT(PB-2094A)

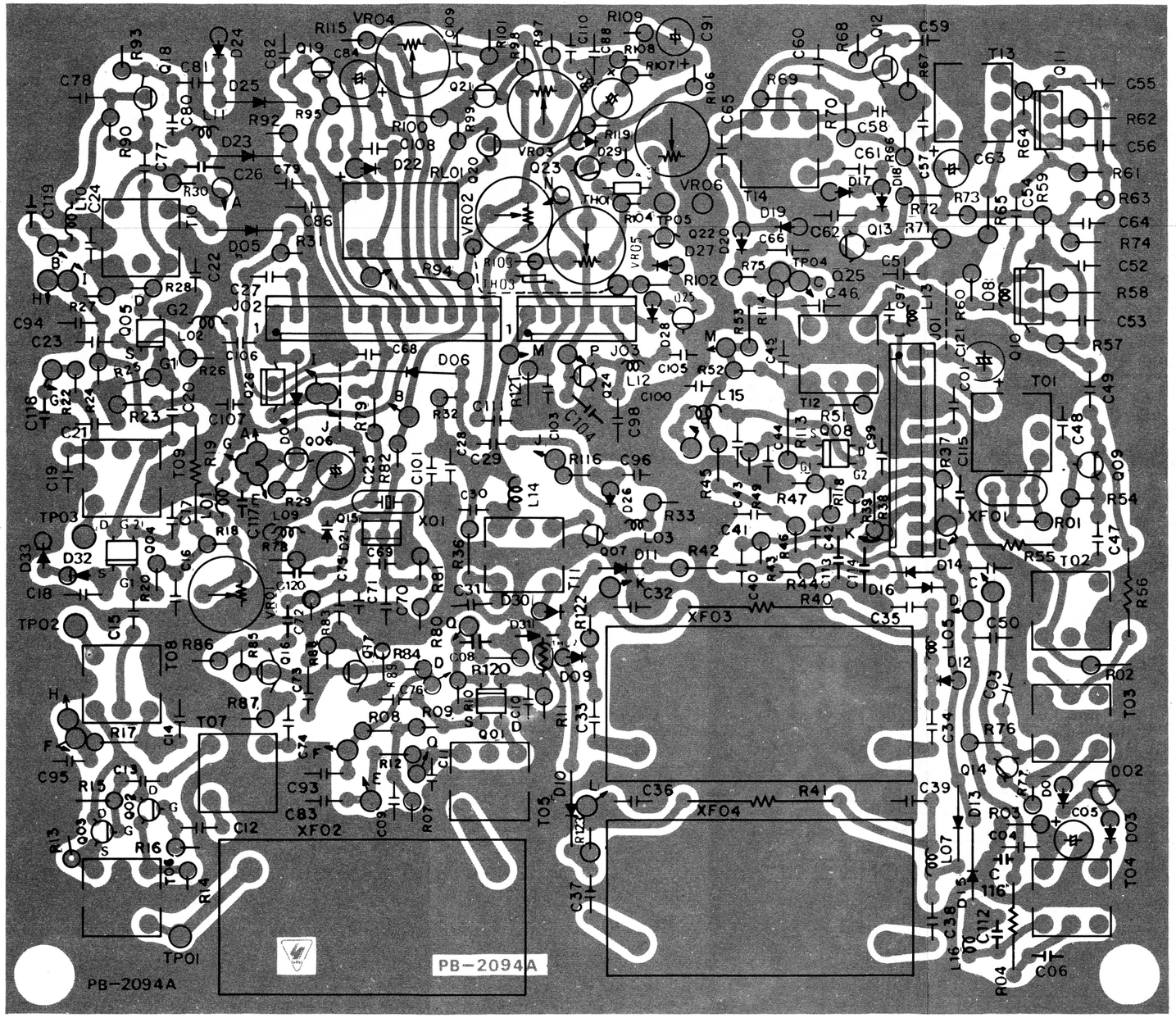

Viewed from foil side

VOLTAGE CHART
(DC VOLTS)

FT707 IF UNIT (PB-2094)

	E(S)	C(D)	B(G1)	(G2)	
Q2001	0.4	8.1	0	0.4	R
Q2002	1.5	7.3	0		R
Q2003	1.5	7.3	0		R
Q2004	1.3	7.4	0.9	*4.5	R
Q2005	1.8	7.4	1.6	*4.5	R
Q2006	8.6	12.0	9.3		R
Q2007	1.8	8.0	0		T
Q2008	0.8	7.5	0.7	2.2	T
Q2009	3.0	6.6	3.6		R
Q2012	1.3	8.0	1.9		R (NB: ON)
Q2013	0	7.6	0		R (NB: ON)
Q2014	0	4.1	0		R
Q2015	1.9	7.5	2.9		R
Q2016	1.7	7.0	2.1		R
Q2017	3.6	7.0	4.2		R
Q2018	3.3	8.0	3.9		R
Q2019	0	*4.5	0		R
Q2020	5.2	8.1	2.8		R
Q2021	4.7	0.2	4.2		R
Q2022	0	0/5	0.7/6.1		R/T
Q2023	0	3.5	0		T
Q2024	0	2.2	0		T
Q2025	1.3	0	10.2		T

* HIGH IMPEDANCE

	E	B1	B2	C1	C2	
Q2010	1.1	1.7	1.1	7.9	7.9	R (NB: ON)
Q2011	1.1	1.7	1.1	7.9	7.9	R (NB: ON)

BAND	20m
MODE	USB
RF GAIN	MAX
NB	OFF

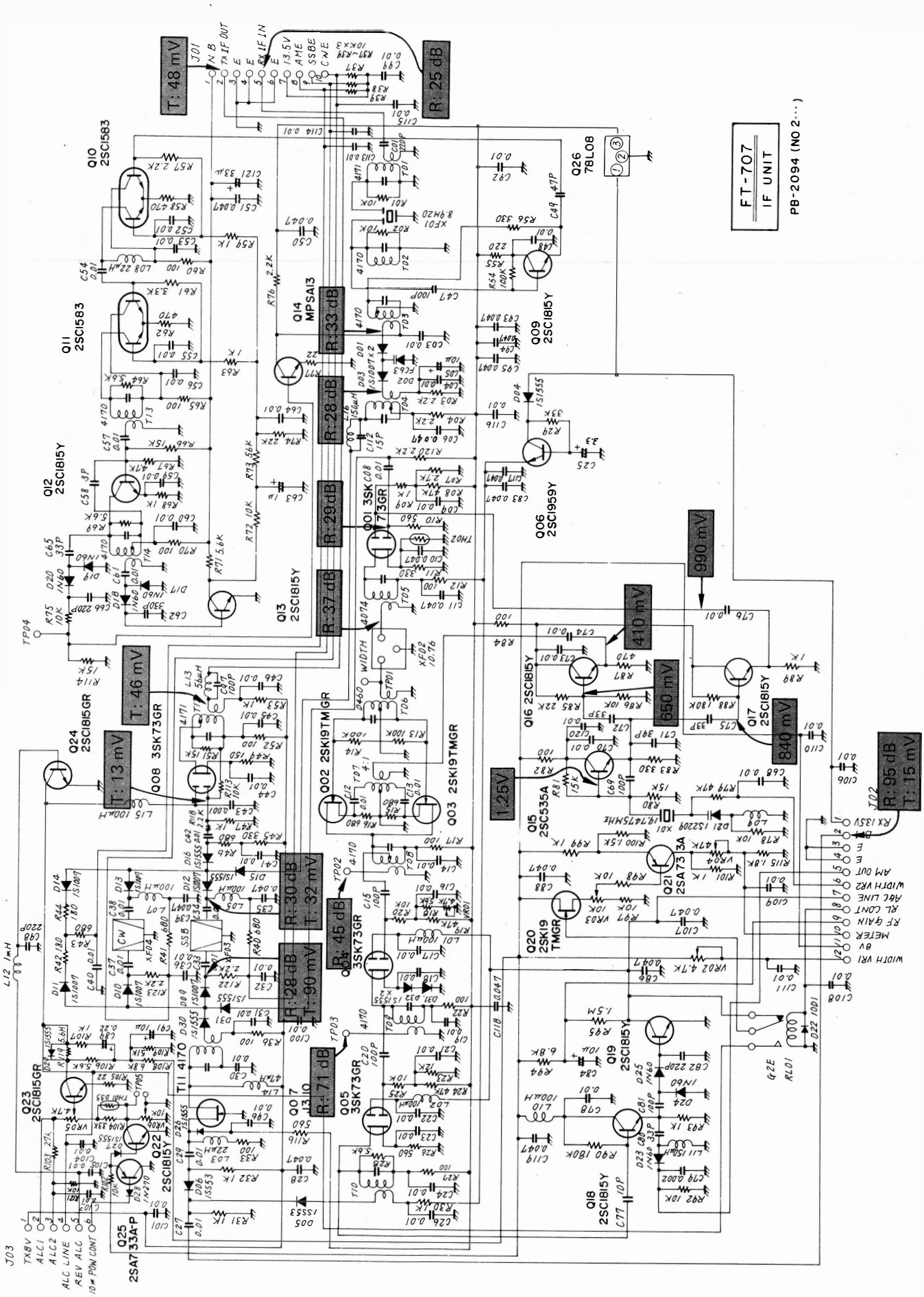
FT-707
IF UNIT
PB-2094 (NO 2···)
T: 48 mV
R: 25 dB
R: 33 dB
R: 28 dB
R: 29 dB
R: 37 dB
T: 46 mV
T: 13 mV
R: 30 dB
T: 32 mV
R: 28 dB
T: 90 mV
R: 45 dB
R: 71 dB
990 mV
410 mV
650 mV
840 mV
1.25V
R: 95 dB
T: 15 mV
Q10 2SC1583
Q11 2SC1583
Q12 2SC1815Y
Q13 2SC1815Y
Q14 MPSA13
Q09 2SC1815Y
Q26 78L08
Q06 2SC1959Y
Q01 3SK73GR
Q02 2SK19TMGR
Q03 2SK19TMGR
Q04 3SK73GR
Q05 3SK73GR
Q07 3SK73GR
Q08 3SK73GR
Q24 2SC1815GR
Q16 2SC1815Y
Q17 2SC1815Y
Q15 2SC535A
Q21 2SA733A
Q20 2SK19 TMGR
Q19 2SC1815Y
Q18 2SC1815Y
Q23 2SC1815GR
Q22 2SC1815Y
Q25 2SA733A-P
T11 4170
TX IF OUT
RX IF IN
13.5V
AME
SSBE
CWE
TX B
E
TXBV
ALC1
ALC2
ALC LINE
REV ALC
10K PON CONT
RX 13.5V
AM OUT
WIDTH VR2
AGC LINE
RL CONT
RF GAIN
METER
BV
WIDTH VR1
WIDTH
G2E
RL01

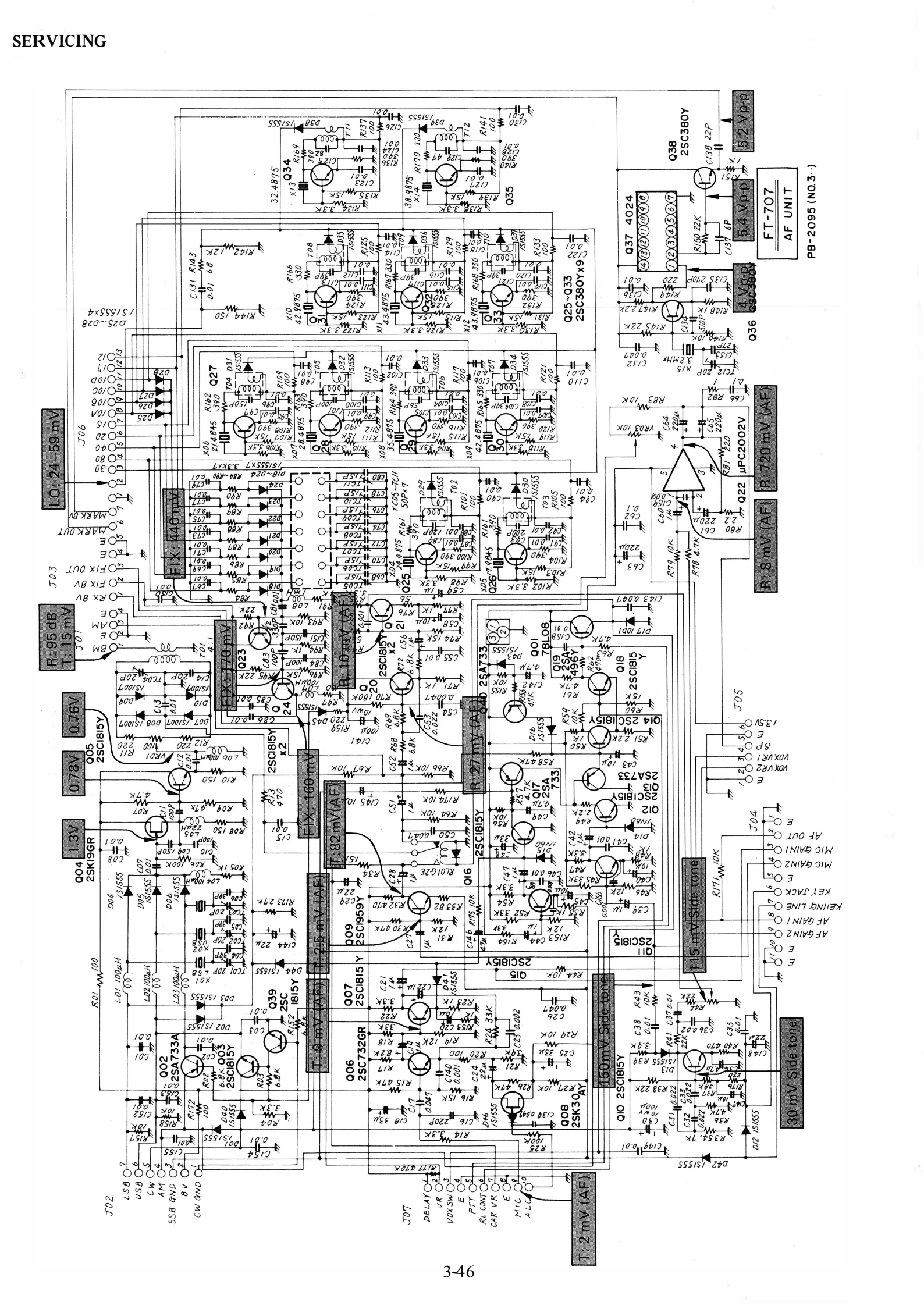
FT-707
AF UNIT
PB-2095 (NO.3-)
LO: 24–59 mV
FIX: 440 mV
R: 95 dB
T: 15 mV
FIX: 170 mV
R: 10 mV (AF)
R: 27 mV (AF)
FIX: 160 mV
T: 82 mV (AF)
T: 2.5 mV (AF)
T: 9 mV (AF)
T: 2 mV (AF)
115 mV Side tone
150 mV Side tone
30 mV Side tone
R: 720 mV (AF)
R: 8 mV (AF)
5.2 Vp-p
5.4 Vp-p
4 Vp-p
0.76V
0.78V
1.3V
Q25~Q33
2SC380Y x9
Q38
2SC380Y
Q37 4024
Q22 μPC2002V
Q01 78L08
Q40 2SA733
Q04 2SK19GR
Q05 2SC1815Y
Q06 2SC732GR
Q07 2SC1815 Y
Q08 2SK30 AY
Q09 2SC959Y
Q10 2SC1815 Y
Q11 2SC1815 Y
Q12 2SC1815Y
Q13 2SC1815Y
Q14 2SC1815Y
Q15 2SC1815Y
Q16 2SC1815Y
Q17 2SA 733
Q18 2SC1815 Y
Q19 2SA 496Y
Q39 2SC 1815Y
Q02 2SA733A
Q03 2SC1815Y
Q36
Q23
Q24
Q20
Q21
Q26
Q27
Q28
Q29
Q30
Q31
Q32
Q33
Q34
Q35
J01
J02
J03
J04
J05
J06
J07
LSB
USB
CW
AM
SSB GND
BV
CW GND
DELAY
VR
VOX SW
E
PTT
RL CONT
CAR VR
MIC
ALC
MARK OUT
MARK BV
FIX OUT
FIX BV
RX BV
BM
AF OUT
MIC GAIN1
MIC GAIN2
KEY JACK
KEYING LINE
AF GAIN1
AF GAIN2
VOX VR1
VOX VR2
SP
13.5V

PARTS LAYOUT
AF UNIT(PB-2095A)

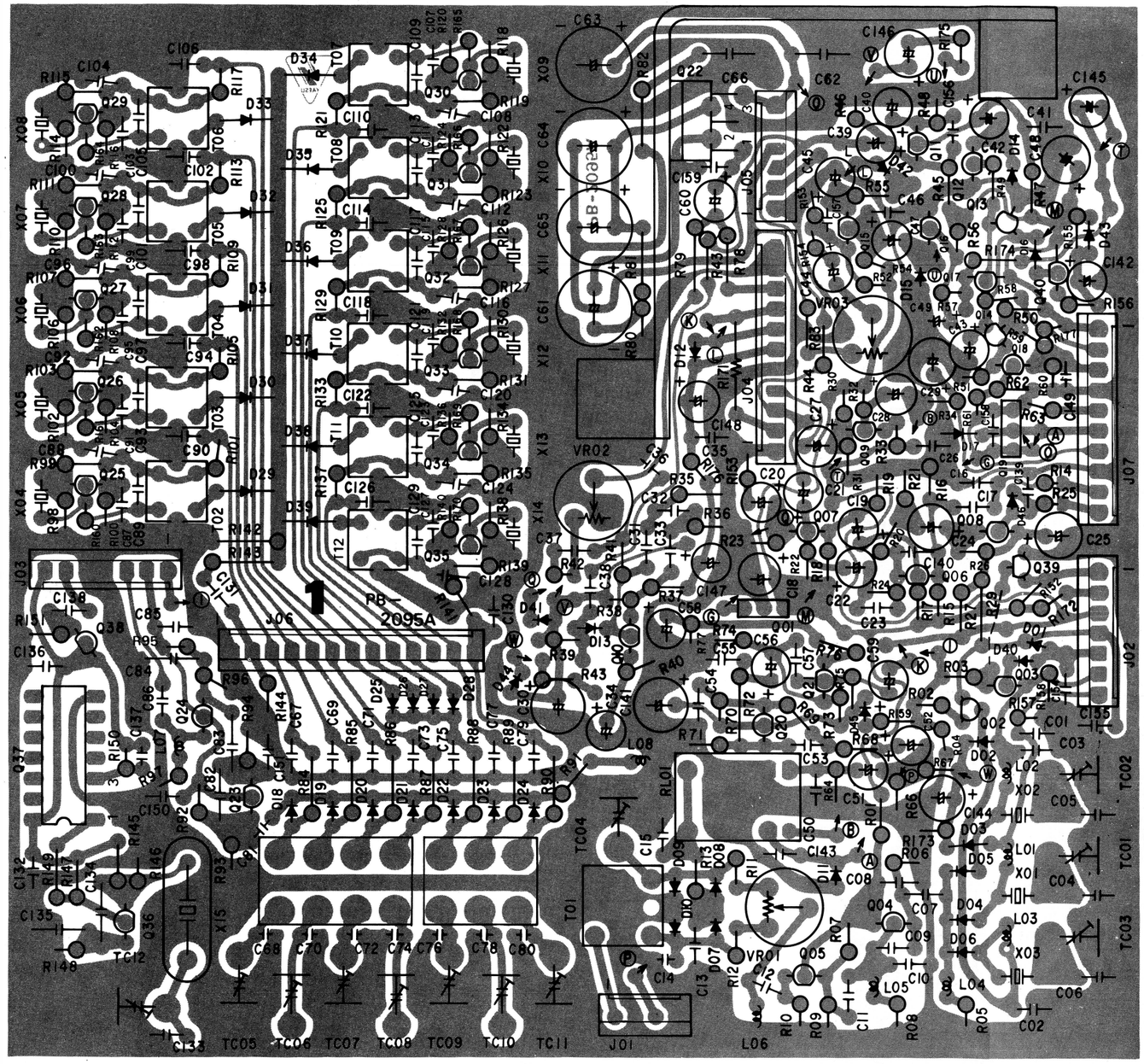

Viewed from component side

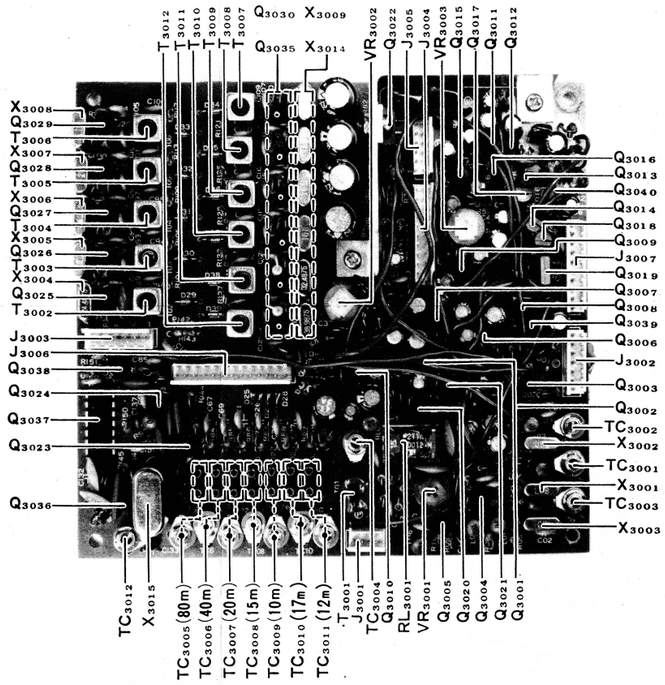

AF UNIT

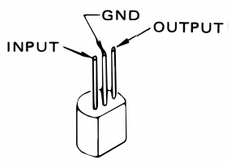

78L05/08

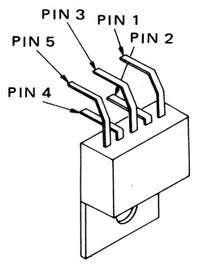

μPC2002V

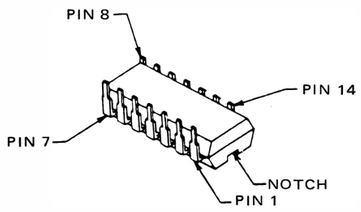

F4024

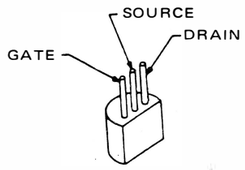

2SK19TM-GR/Y

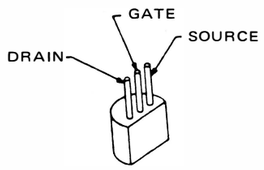

2SK30A-Y

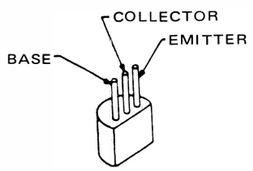

2SA733(A)P/Q
2SC380TM-Y
2SC732TM-GR
2SC1815Y/GR
2SC1959Y

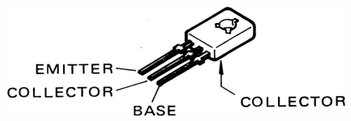

2SC496

PARTS LAYOUT
AF UNIT(PB-2095A)

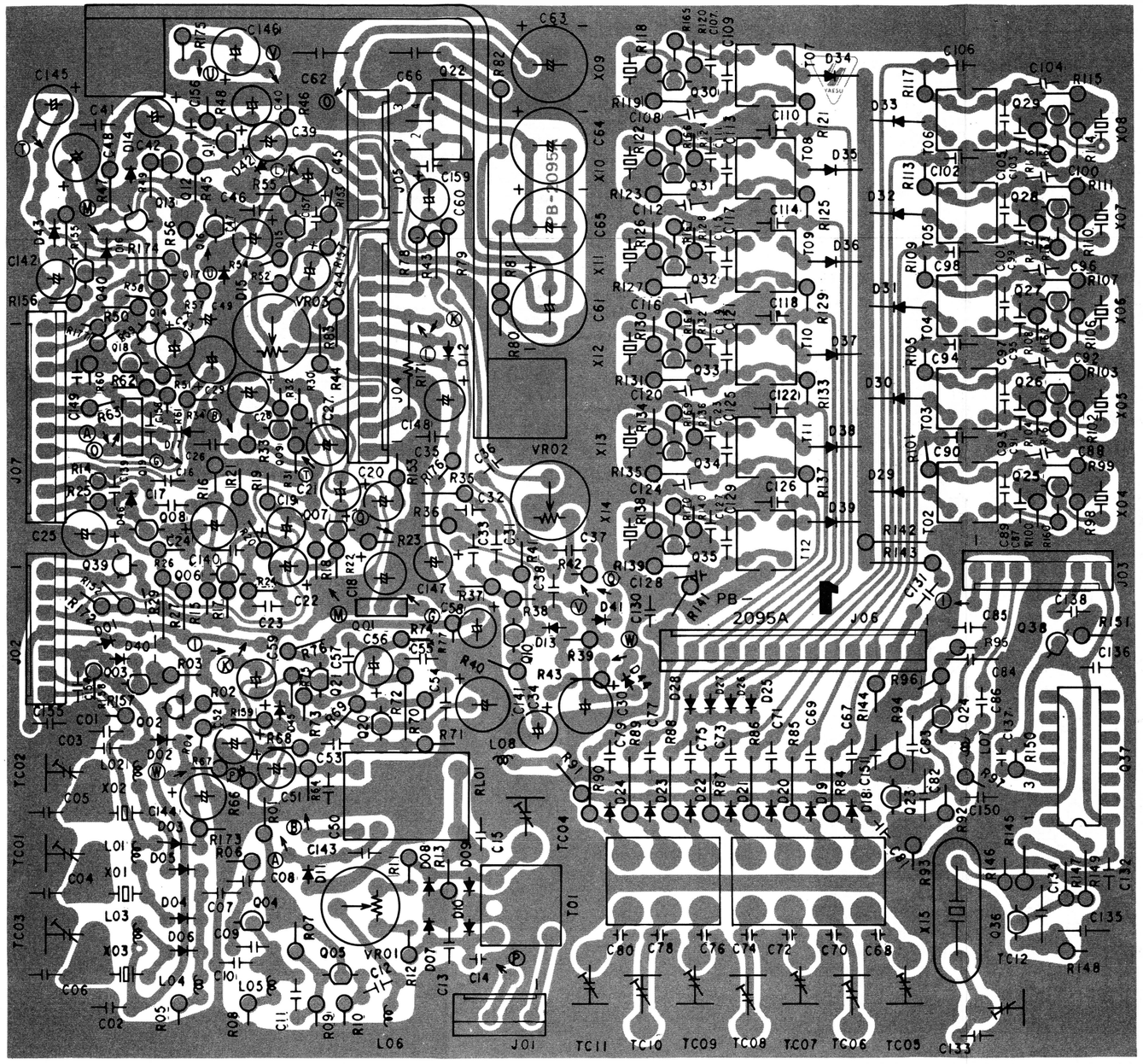

Viewed from foil side

VOLTAGE CHART
(DC VOLTS)

FT707 AF UNIT (PB-2095)

	E(S)	C(D)	B(G1)	(G2)	
Q3002	6.7	6.7	6.1		T (CW)
Q3003	6.3	6.4	7.0		T (AM)
Q3004	0.7	6.0	0		R (AM)
Q3005	2.1	6.0	2.8		R (CW)
Q3006	1.3	5.1	1.9		R
Q3007	1.4	3.2	2.1		R
Q3008	6.7	6.7	0.2		T
Q3009	0.5	4.8	1.2		T
Q3010	0.8	0.8	1.5		R
Q3011	2.0	3.2	1.4		R
Q3012	0	3.7	0		R
Q3013	5.8	0	3.7		R
Q3014	5.2	5.3	5.8		R
Q3015	1.4	3.2	2.0		R
Q3016	0	8.0	0		R
Q3017	8.0	3.7	8.0		R
Q3018	5.2	14.0	3.2		R
Q3019	14.0	0	14.0		R
Q3020	3.0	6.6	3.6		R
Q3021	0.7	4.2	1.4		R
Q3023	1.8	8.1	2.4		R (FIX ON)
Q3024	1.7	8.1	2.4		R
Q3025–Q3035	1.3	7.2	2.0		R
Q3036	1.7	4.2	2.4		R (MARKER ON)
Q3038	3.2	8.1	3.5		R
Q3039	0	1.5	0		T
Q3040	8.0	0	8.0		T

	IN	OUT	
Q3001	14.0	8.0	R

	1	2	3	4	5	
Q3022	0.7	0.7	0	6.6	14.0	R

	1	2	3	4	5	6	7	8	9	10	11	12	13	14	
Q3037	4.1	0	–	–	–	–	0	–	–	–	–	–	–	8.1	R (MARKER ON)

BAND	20m
MODE	USB
RF GAIN	MAX
NB	OFF
AGC	SLOW
MARK	OFF

AVR UNIT PARTS LAYOUT(PB-2099A)

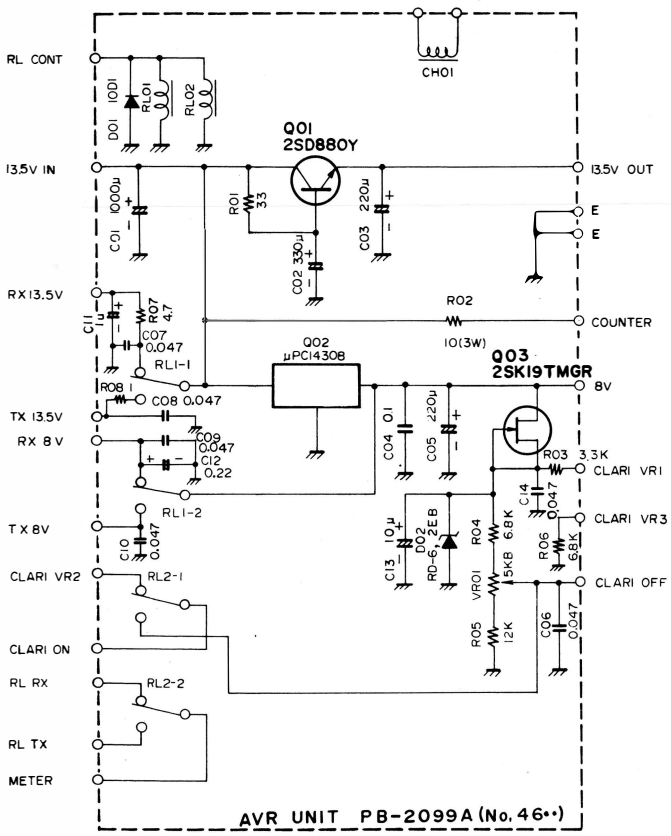

VOLTAGE CHART
(DC VOLTS)

	E(S)	C(D)	B(G)
Q4601	13.3	14.0	13.9
Q4603	6.3	8.0	6.3

	IN	OUT
Q4602	14.0	8.0

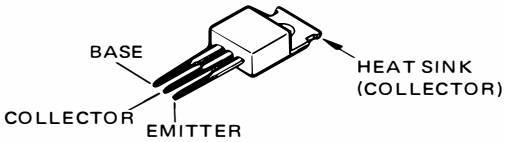

2SD880

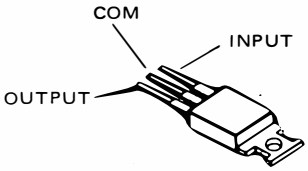

μPC14308

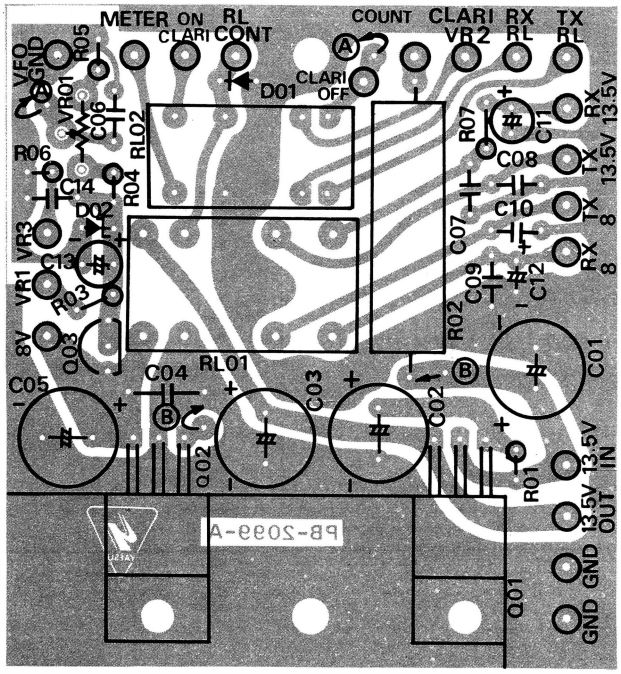

Viewed from component side

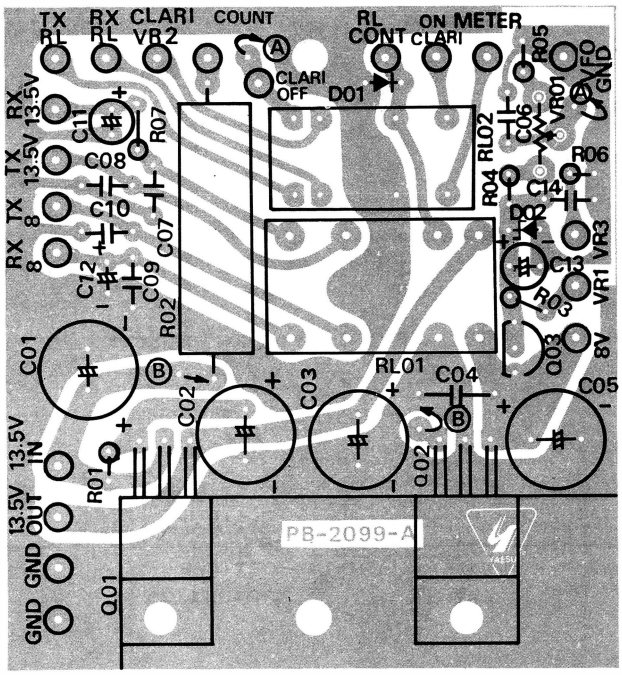

Viewed from foil side

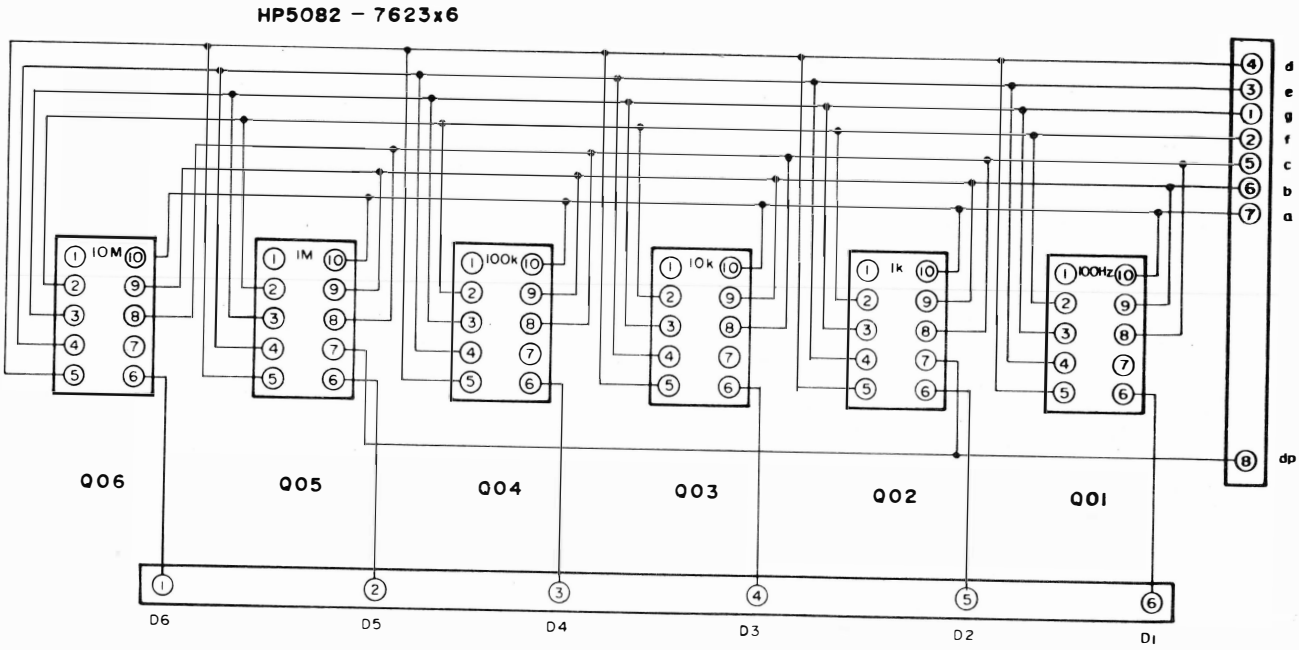

DISPLAY UNIT PB-2098

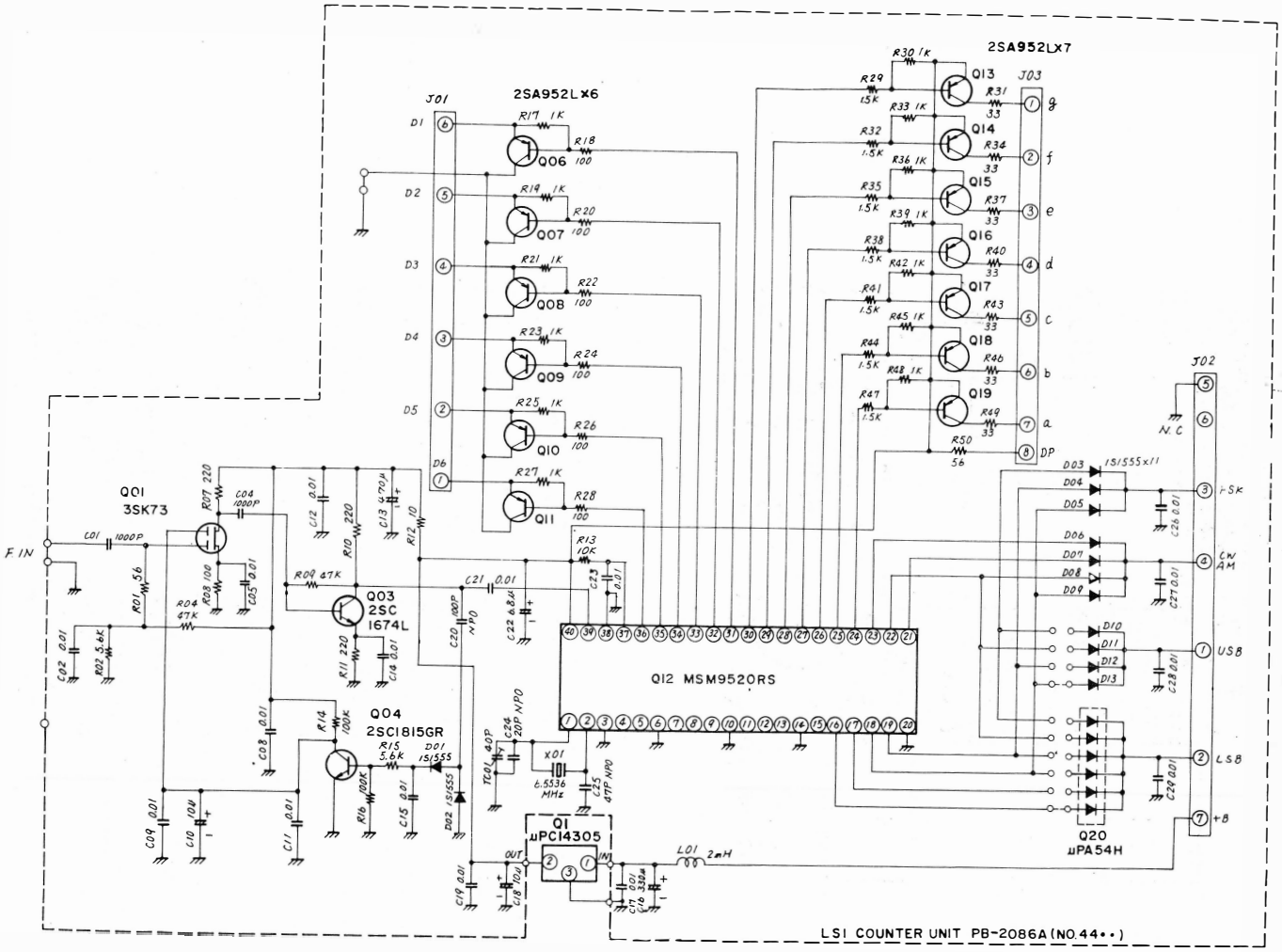

VOLTAGE CHART
(DC VOLTS)

	E (S)		C (D)		B (G1)		G2	
	R	T	R	T	R	T	R	T
Q4401	0.3	–	4.3	–	0.5	–	4.0	–
Q4403	1.0	–	4.0	–	1.7	–	–	–
Q4404	0	–	0.4	–	0.5	–	–	–
Q4406	2.1	–	0	–	2	–	–	–
Q4407	3.4	–	0	–	3.3	–	–	–
Q4408	2.1	–	0	–	2.0	–	–	–
Q4409	2.1	–	0	–	2.0	–	–	–
Q4410	3.4	–	0	–	3.3	–	–	–
Q4411	2.1	–	0	–	2.0	–	–	–
Q4413	5.1	–	2.0	–	4.9	–	–	–
Q4414	5.1	–	4.4	–	4.6	–	–	–
Q4415	5.1	–	4.0	–	4.6	–	–	–
Q4416	5.1	–	4.4	–	4.6	–	–	–
Q4417	5.1	–	4.4	–	4.6	–	–	–
Q4418	5.1	–	4.0	–	4.6	–	–	–
Q4419	5.1	–	4.4	–	4.6	–	–	–

DISPLAY
5.000.0

	IN	COM	OUT
Q1	11.2	0	5.0

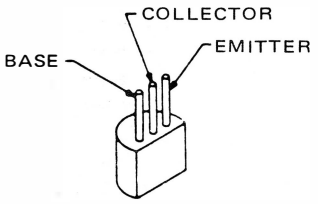

2SA952L
2SC1674L
2SC1815Y/GR

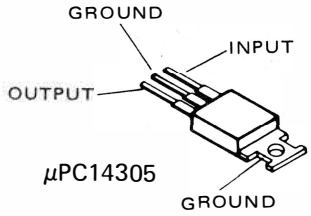

μPC14305

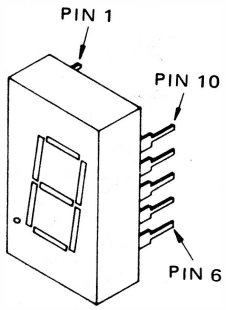

HP5082-7623

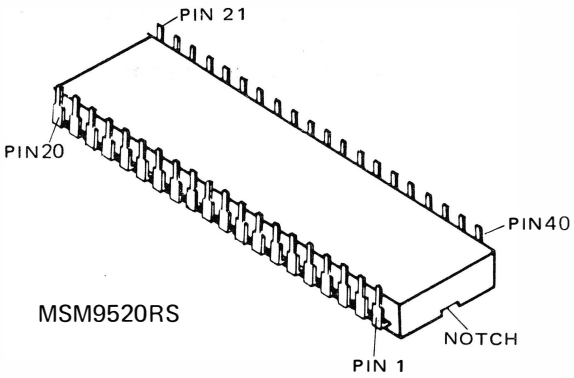

MSM9520RS

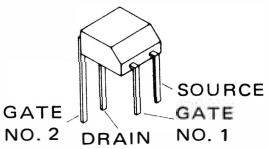

3SK73

COUNTER UNIT PARTS LAYOUT

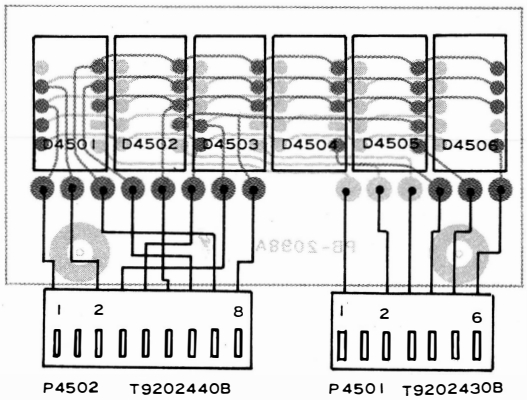

MAIN BOARD

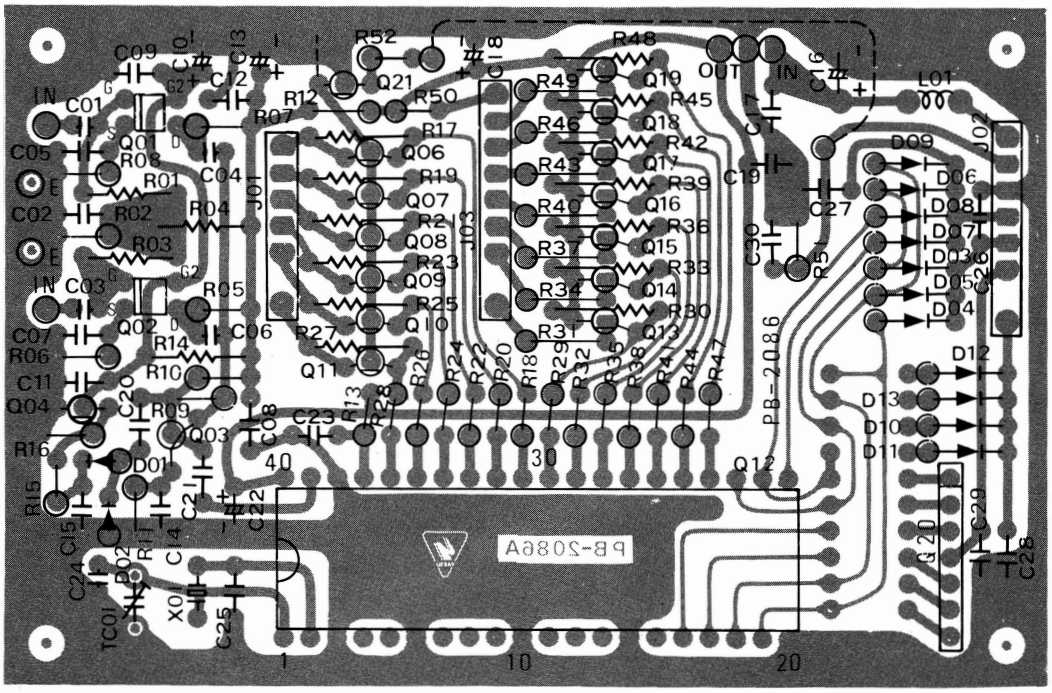

Viewed from component side

Not used

Q4402	C2303
R2303	C2306
R2305	C2307
R2306	

COUNTER UNIT PARTS LAYOUT

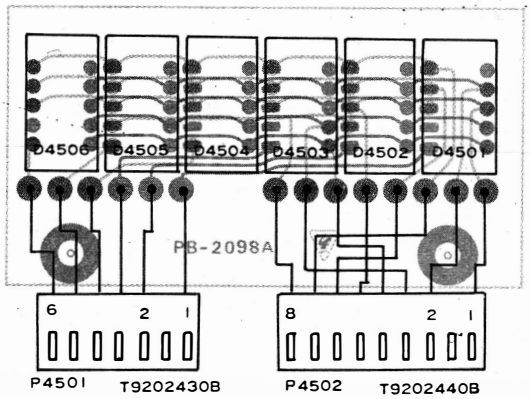

MAIN BOARD

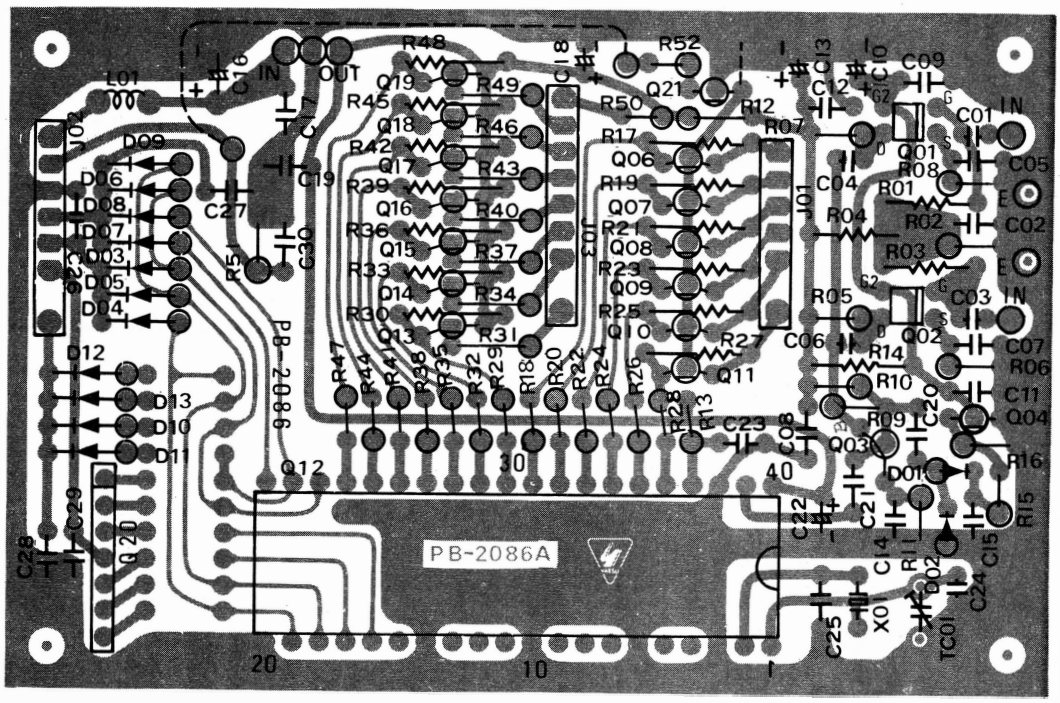

Viewed from foil side

VFO ASSEMBLY
VFO UNIT(PB-2097A)

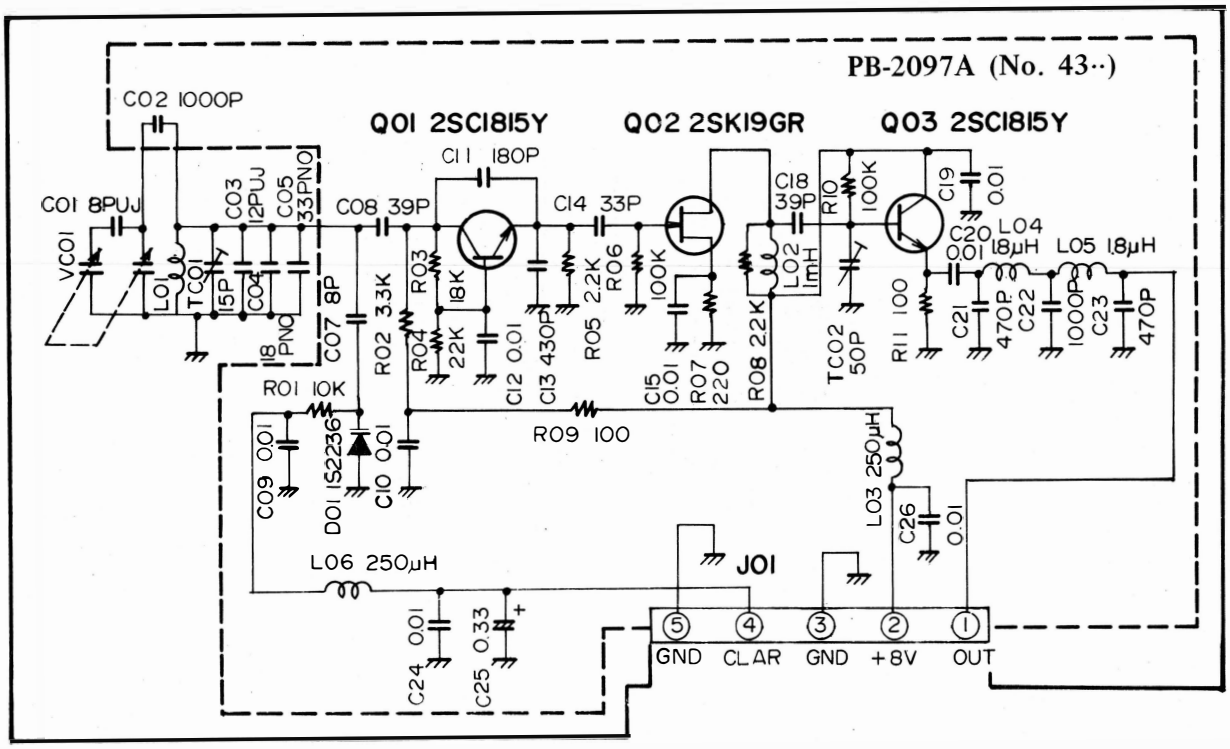

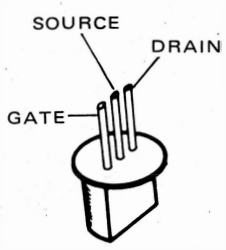

2SK19GR

VOLTAGE CHART
(DC VOLTS)

	E(S)	C(D)	B(G)
Q4301	1.4	3.7	1.9
Q4302	0.9	6.0	0
Q4303	0.9	6.0	1.6

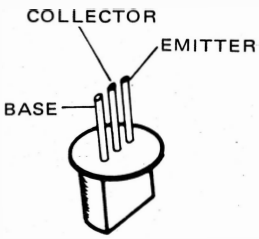

2SC372Y

VFO UNIT PARTS LAYOUT
(PB-2097A)

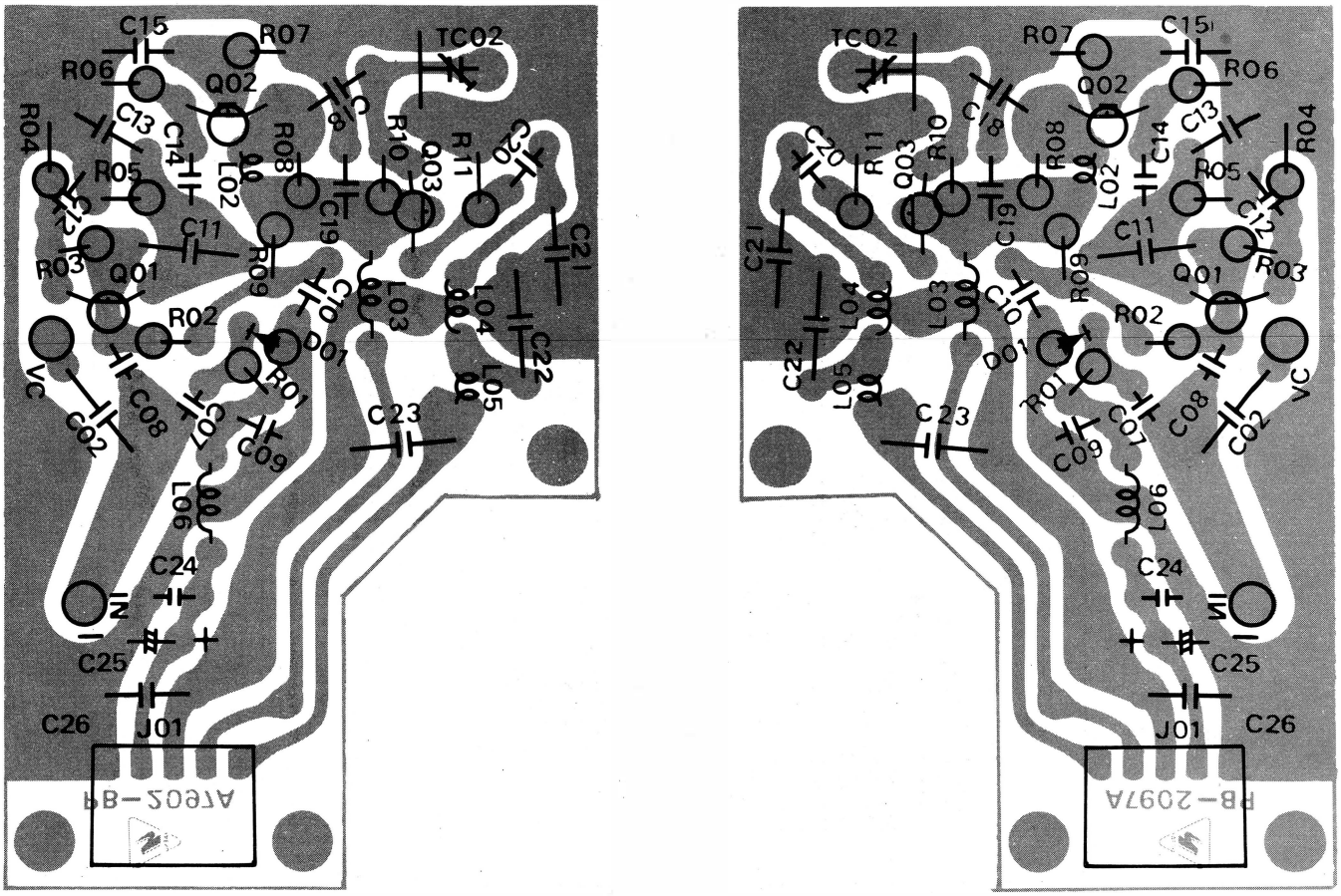

VFO UNIT EXPLODED VIEW

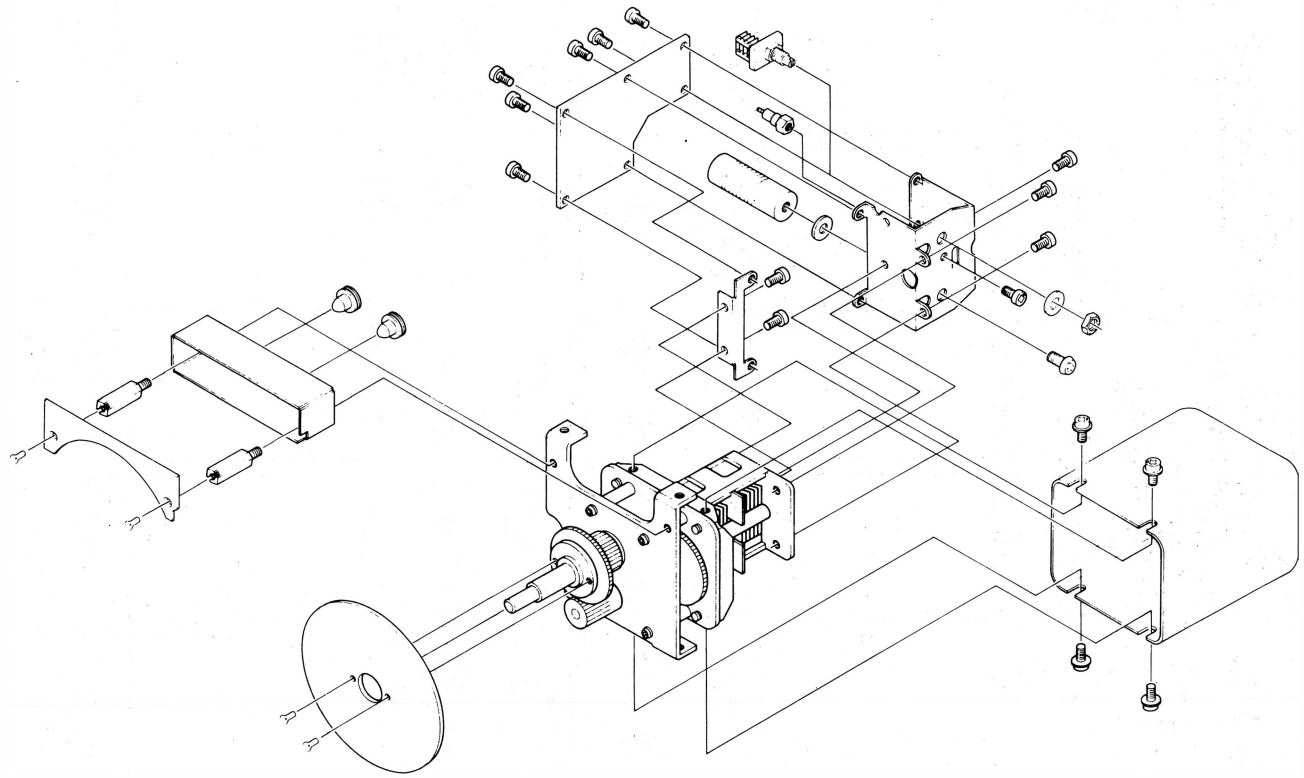

LPF UNIT PARTS LAYOUT
(PB-2128)

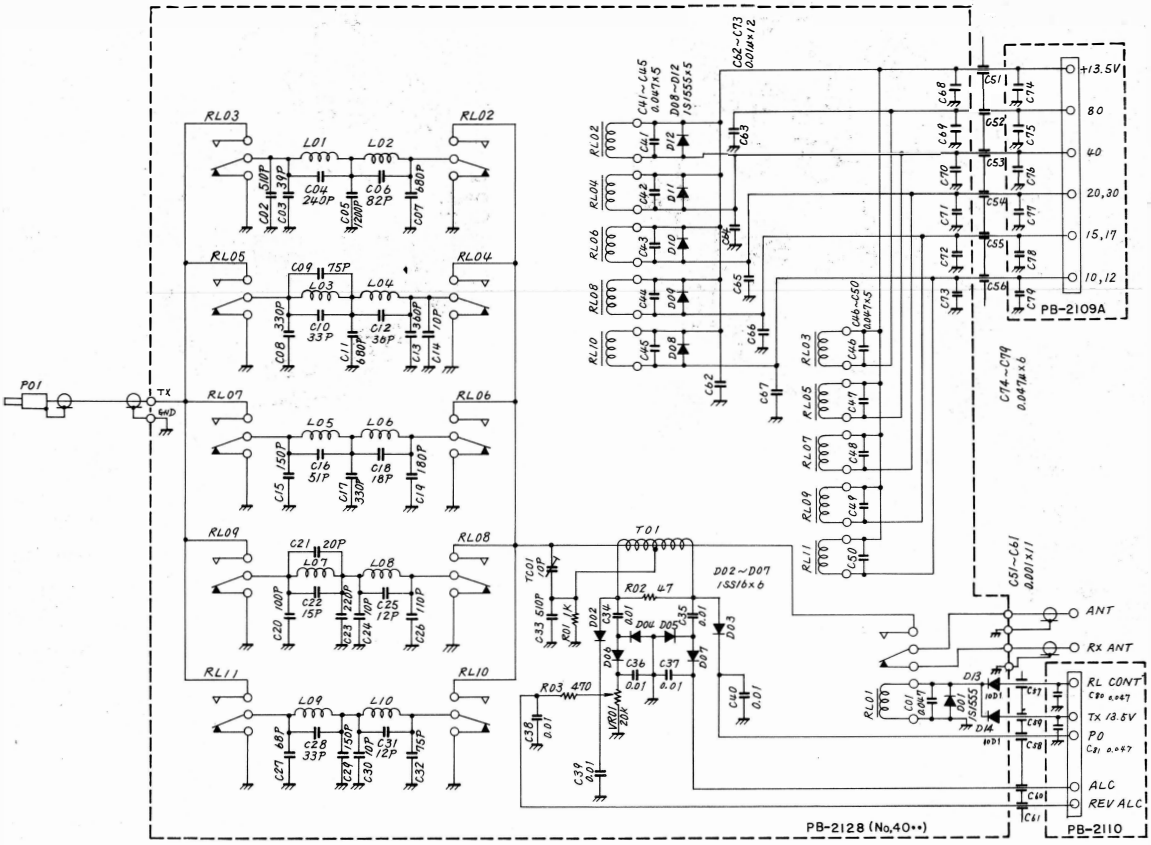

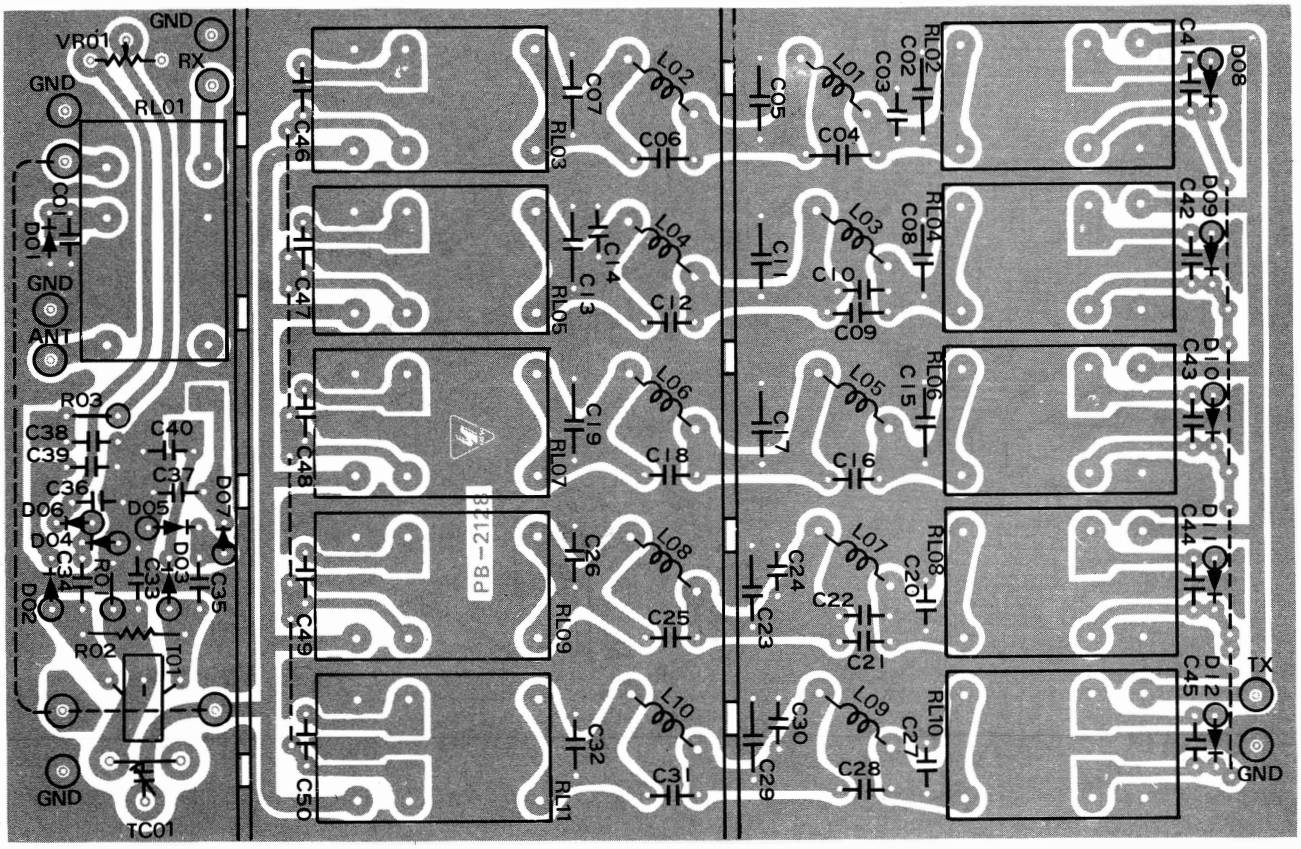

Viewed from foil side

LPF UNIT MOUNTING DETAIL

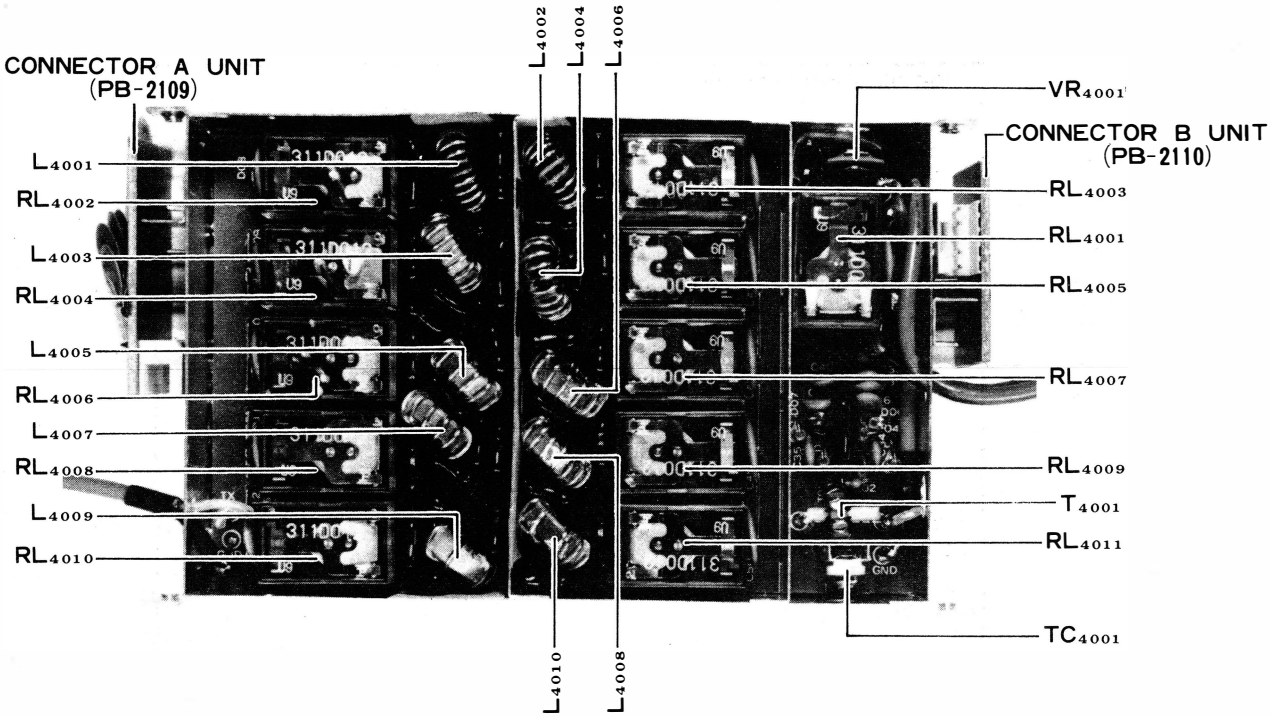

RELAY CONNECTIONS
RL4001–4011
(FBR311D012)

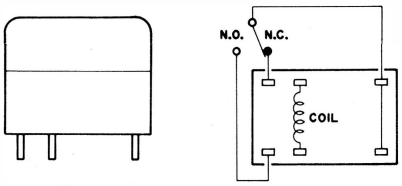

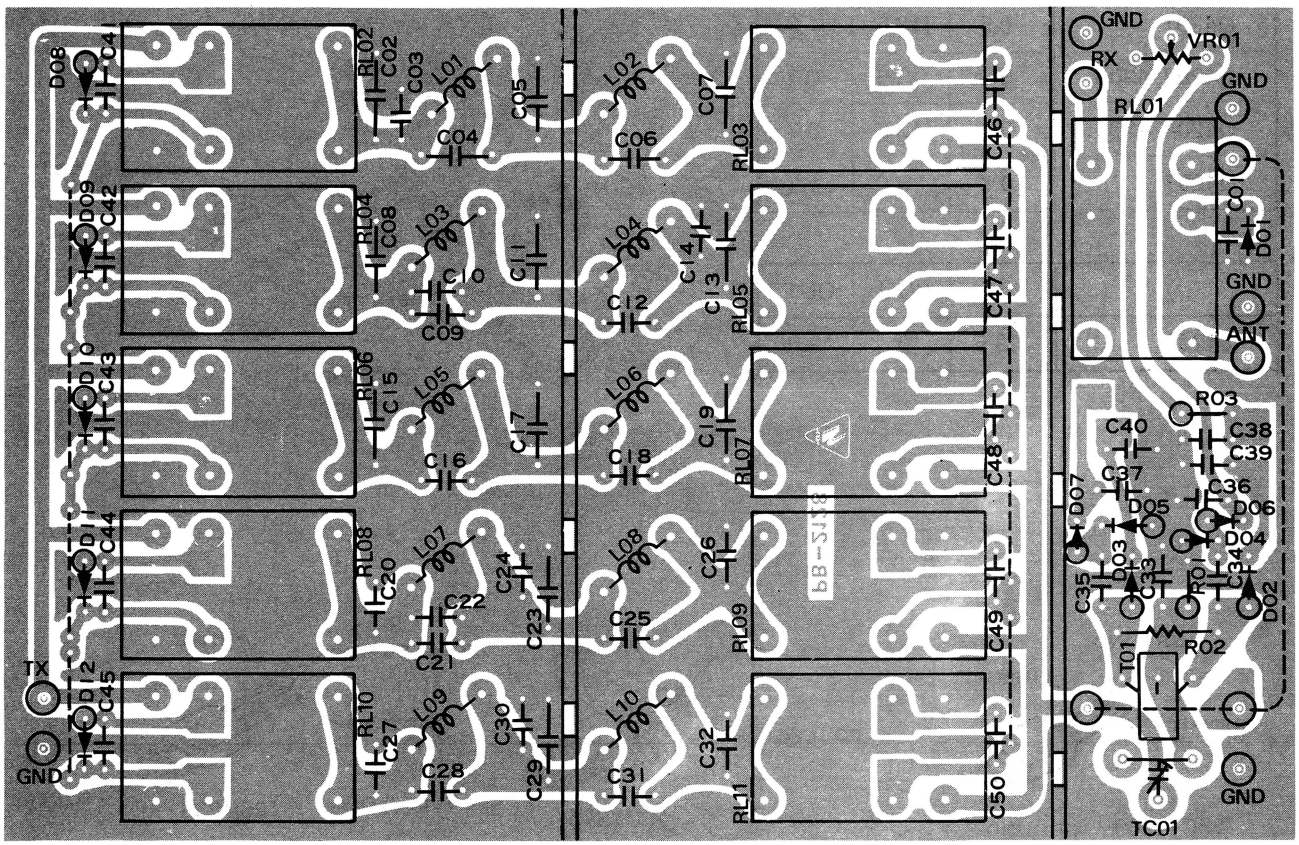

Viewed from component side

100W PA UNIT (PB-2013)

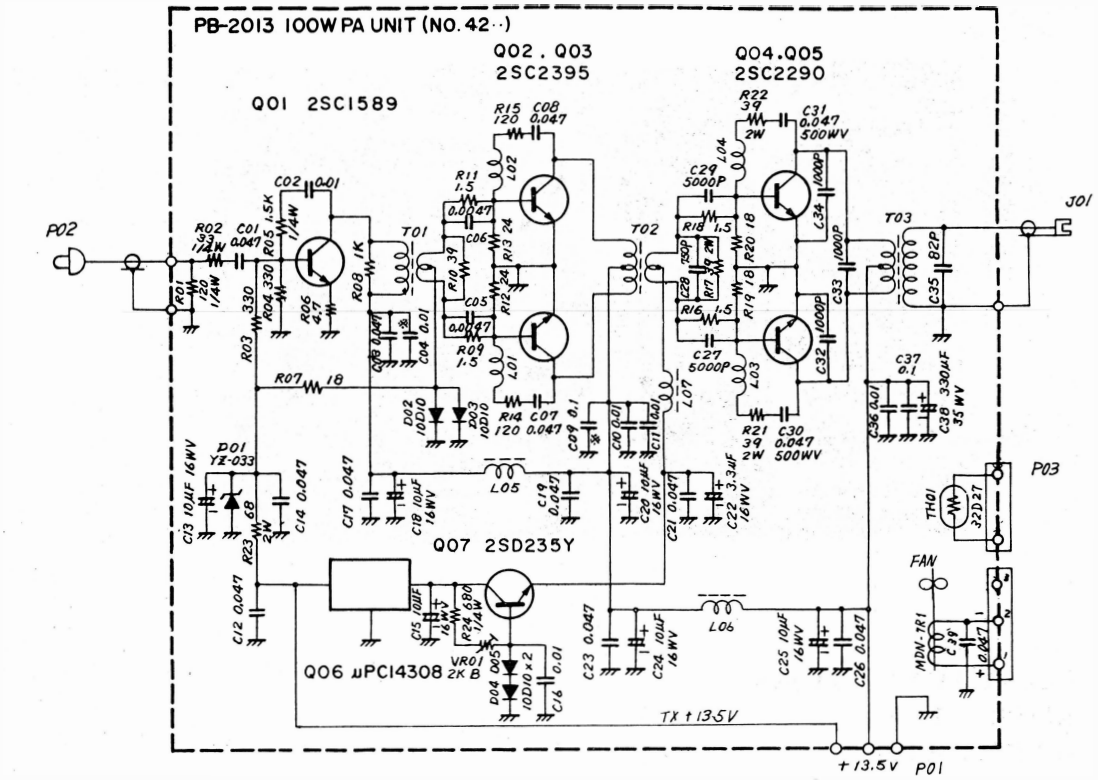

	E	C	B
Q4201	0.5	13.5	1.3
Q4202, 4203	0	13.5	0.7
Q4204, 4205	0	13.5	0.7
Q4207	0.7	8.0	1.3

	IN	COM	OUT
Q4206	13.5	0	8.0

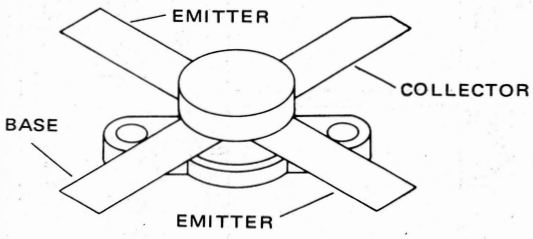

2SC2290
2SC2395

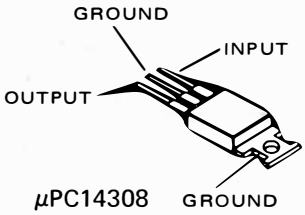

μPC14308

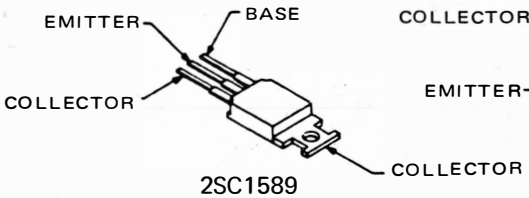

2SC1589

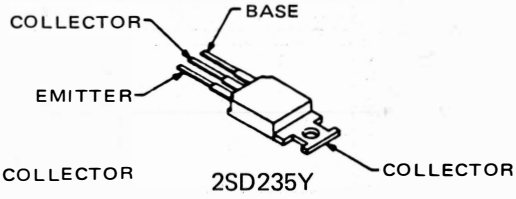

2SD235Y

100W PA UNIT PARTS LAYOUT

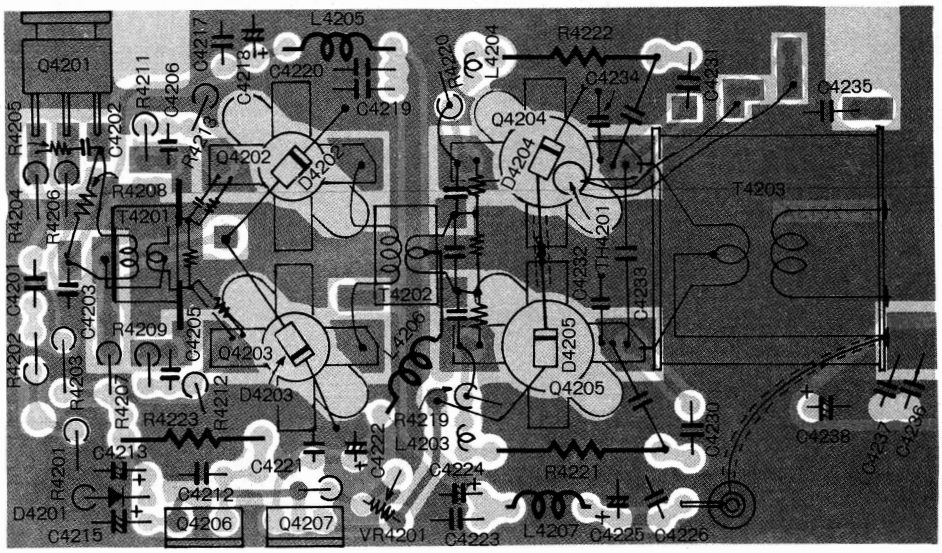

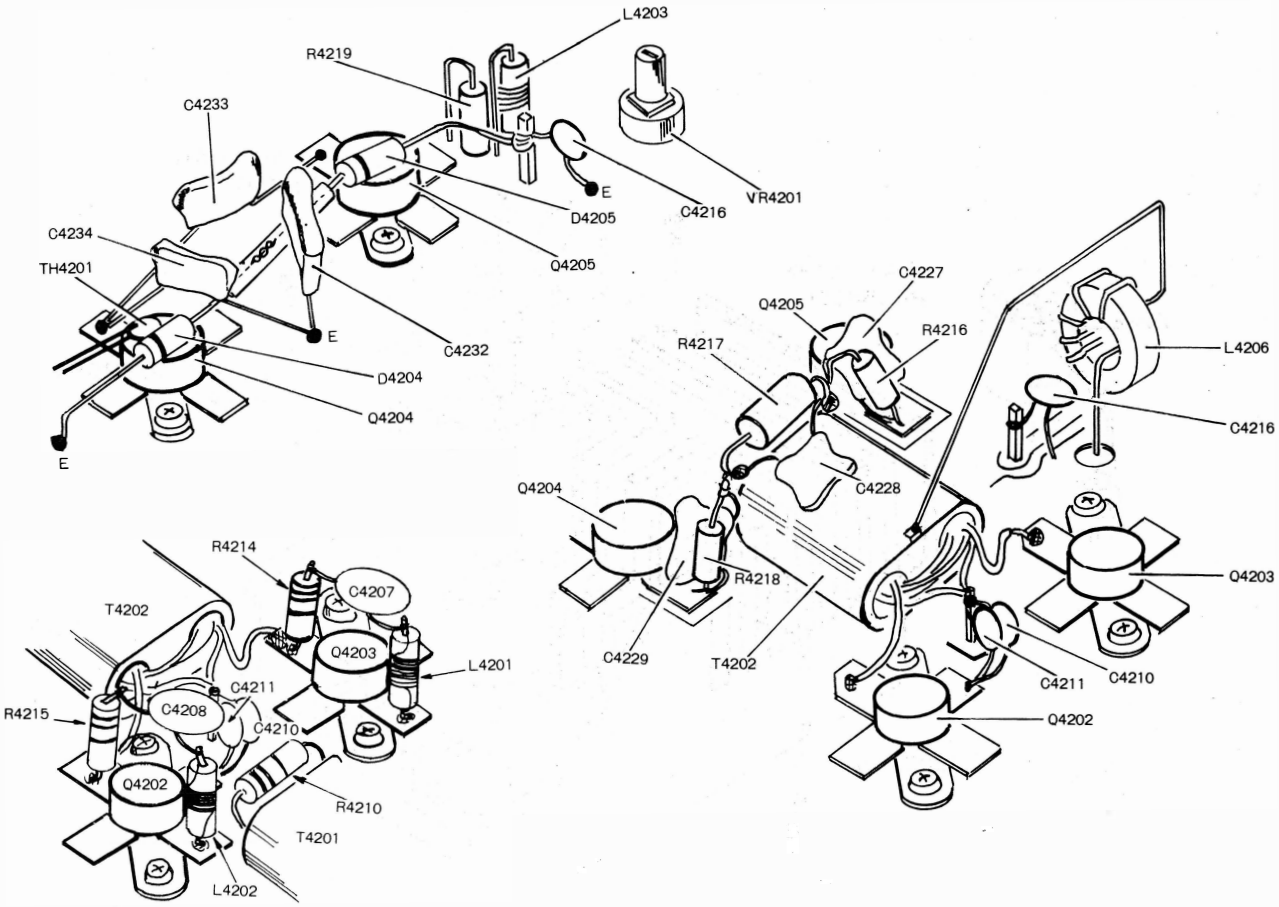

100W PA UNIT ASSEMBLY

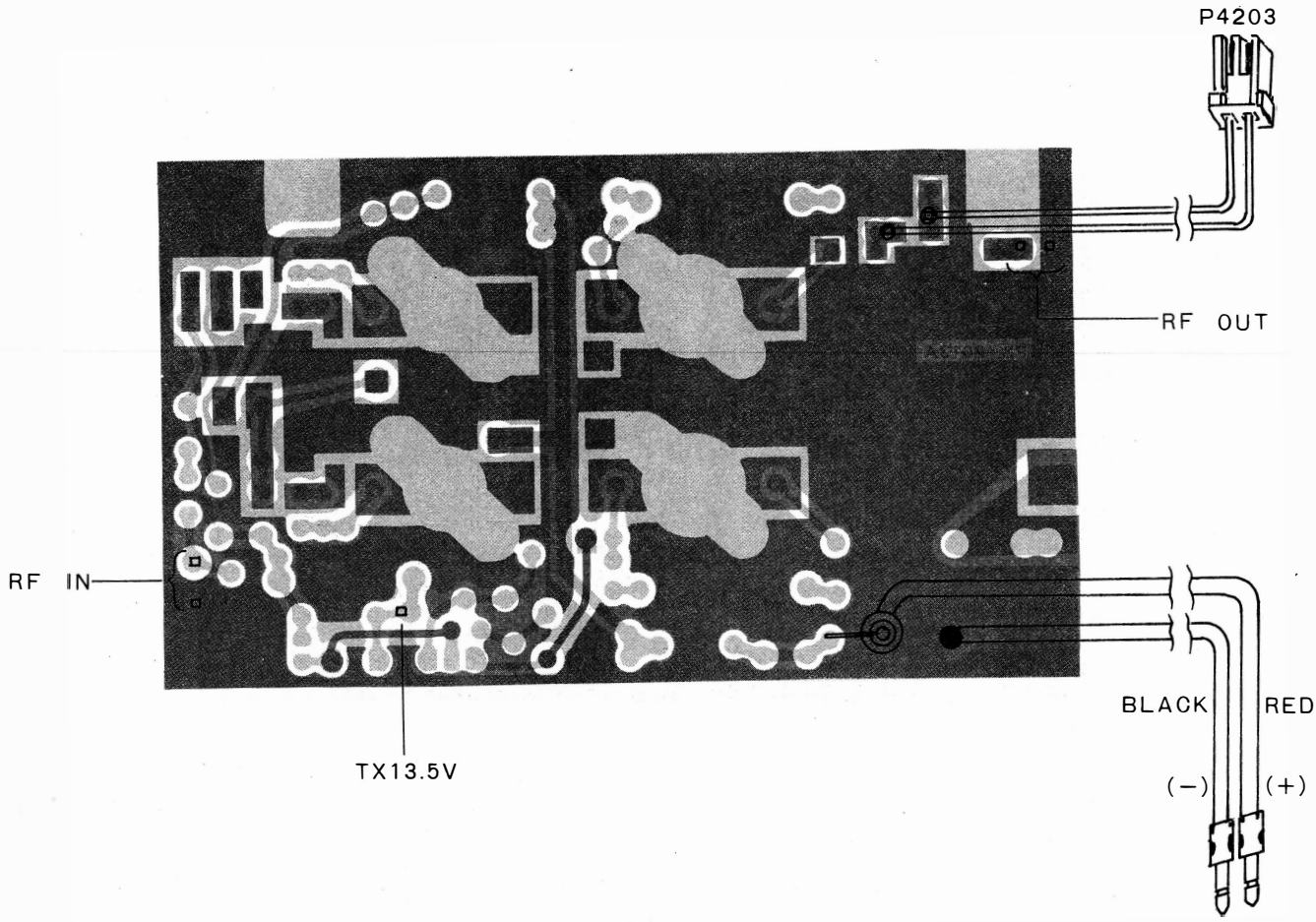

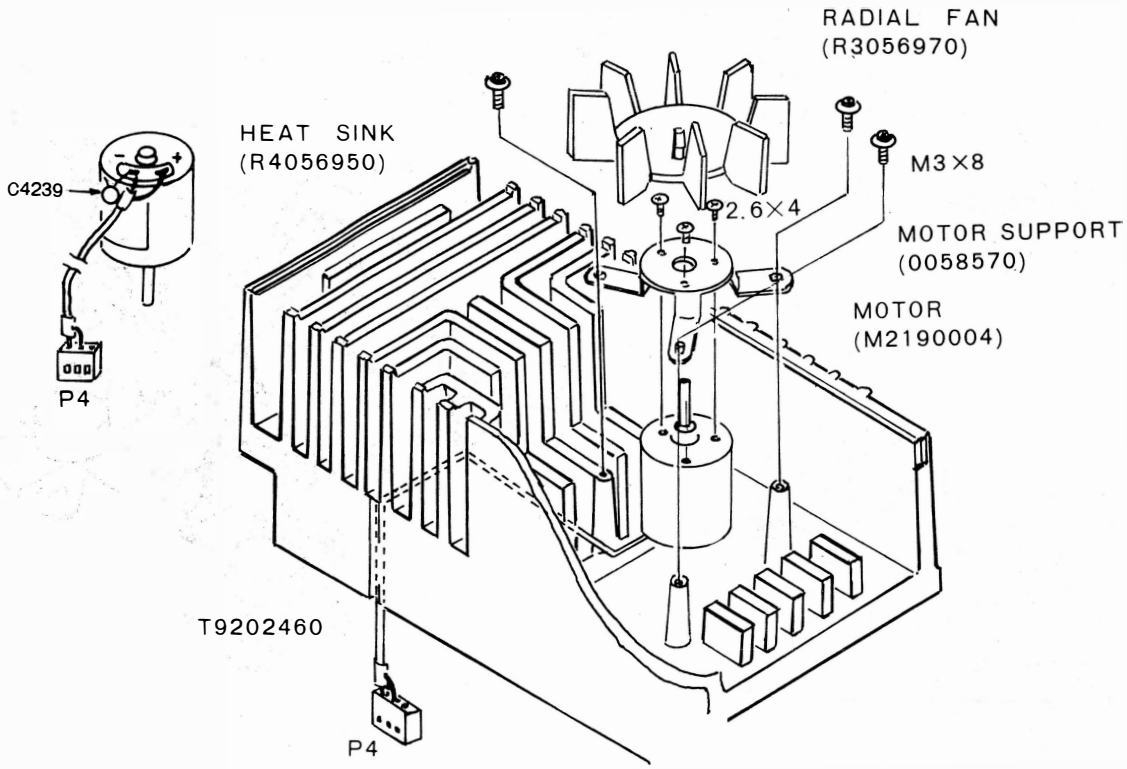

HPF/FAN MOTOR CONTROL UNIT
PARTS LAYOUT (PB-2101)

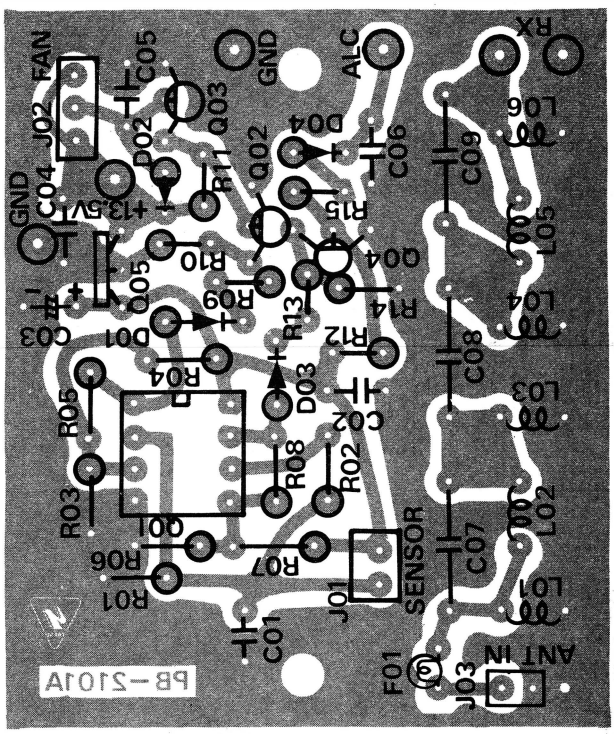

Viewed from component side

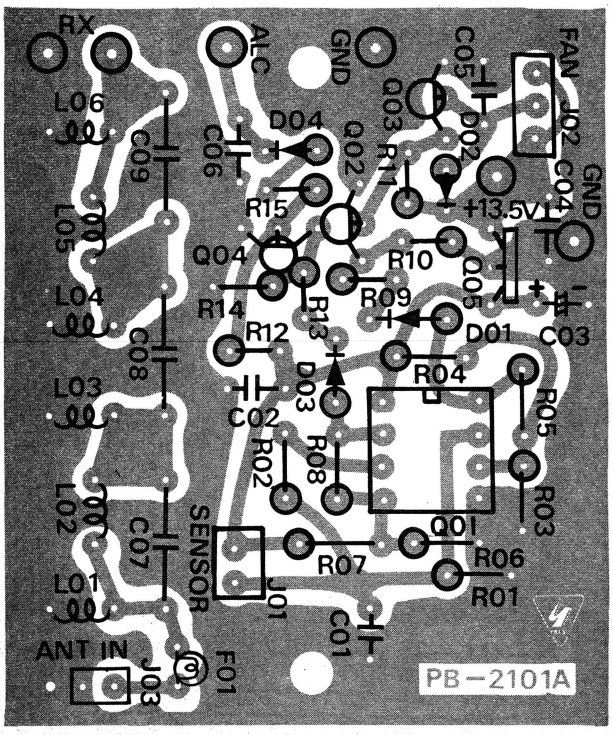

Viewed from foil side

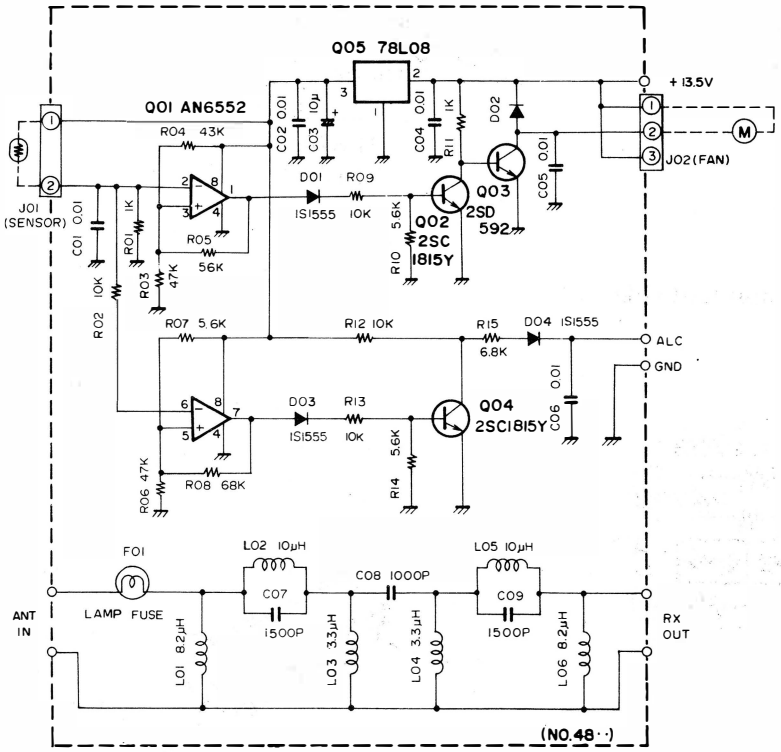

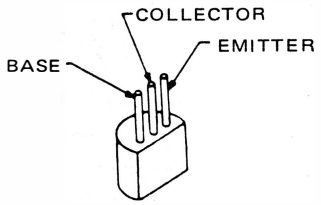

2SC1815Y
2SD592

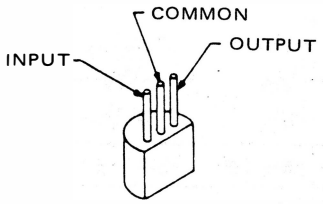

μPC78L05

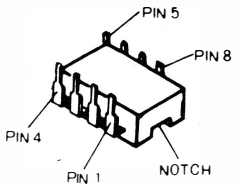

AN6552

	1	2	3	4	5	6	7	8
Q4801	1.3	4.9	3.3	0	7.1	4.9	7.1	7.9

	E	C	B
Q4802	0	0.7	0.3
Q4803	0	0	0.7
Q4804	0	0.6	0.7

	IN	OUT
Q4805	14.2	8.0

LEVEL METER(INDICATOR)UNIT PARTS LAYOUT(PB-2100)

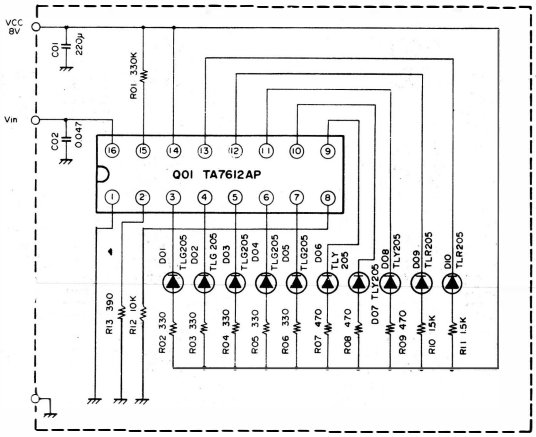

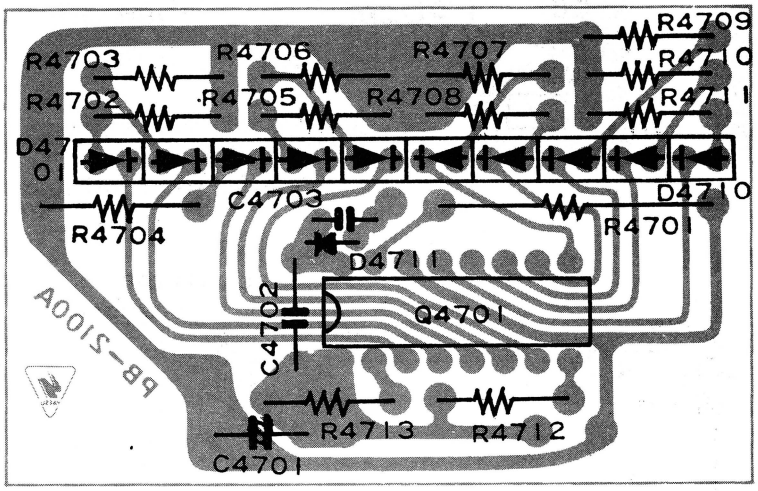

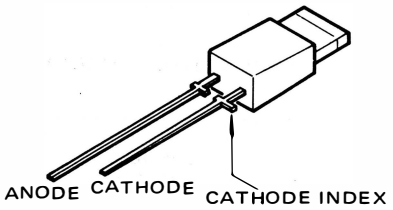

TLG205
TLR205
TLY205

Viewed from component side

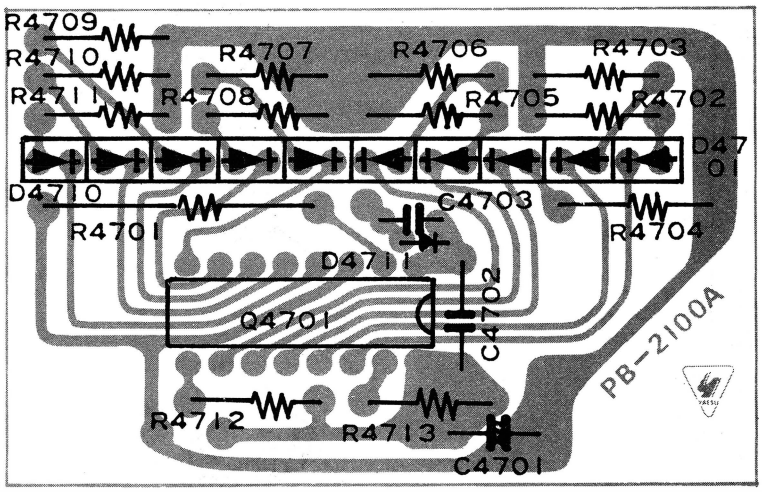

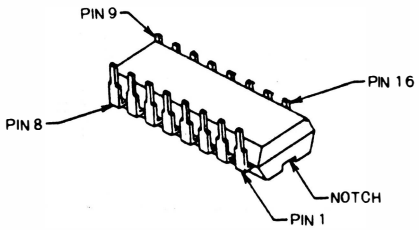

TA7612P

Viewed from foil side

SW UNIT
PARTS LAYOUT(PB-2102)

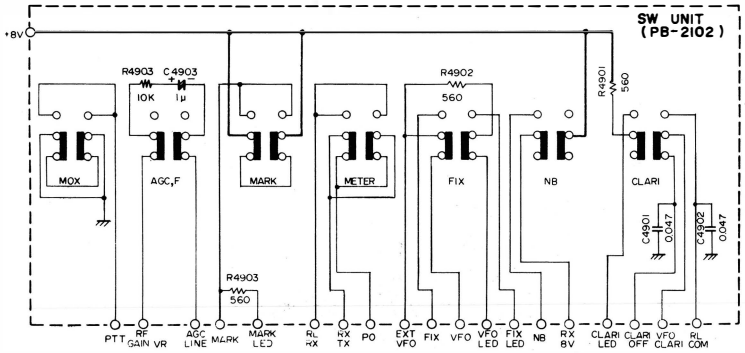

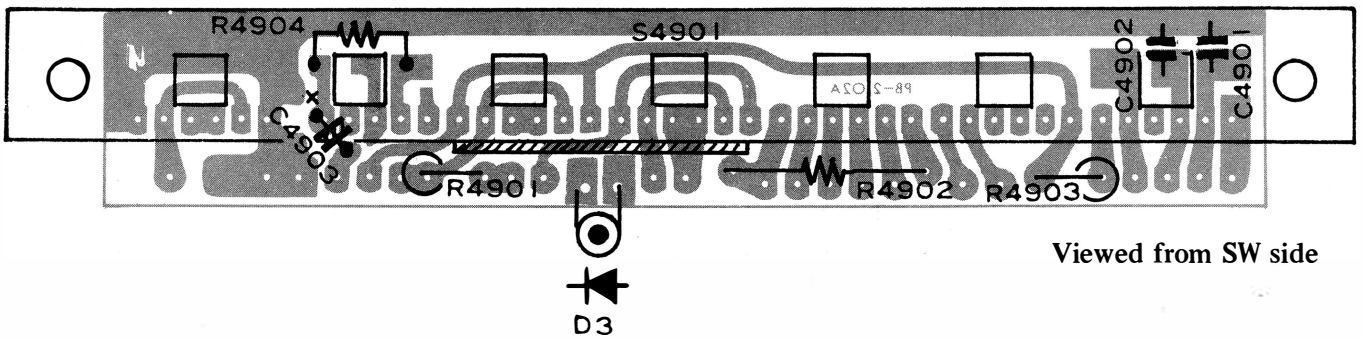

Viewed from SW side

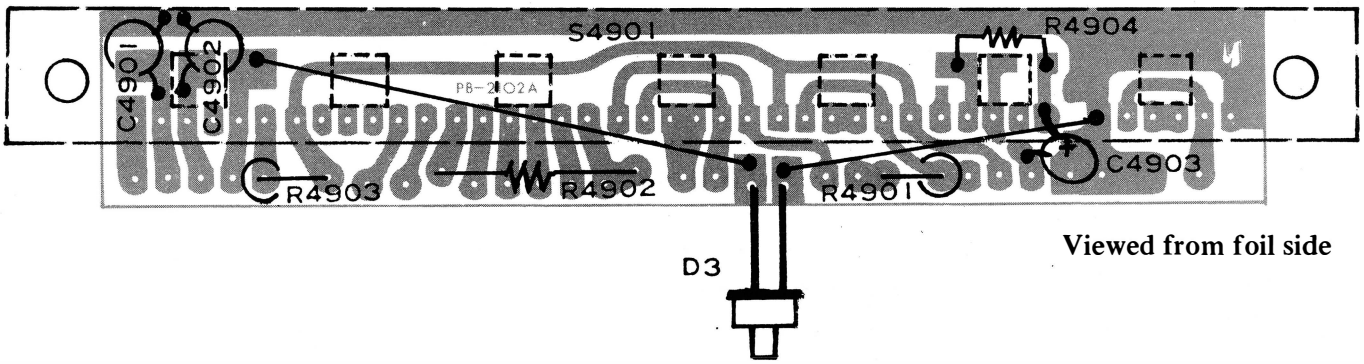

Viewed from foil side

VR UNIT A/B (PB-2103A)

VR UNIT B

DELAY TIME CONTROL

VR UNIT A

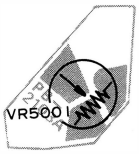

VOX GAIN CONTROL

SWITCH ASSEMBLIES

BAND SWITCH ASSEMBLY

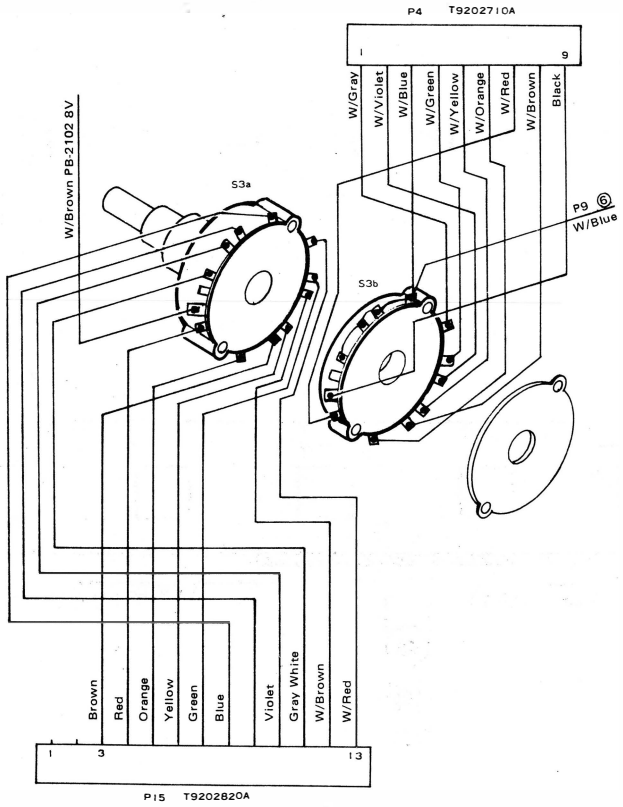

MODE SWITCH ASSEMBLY

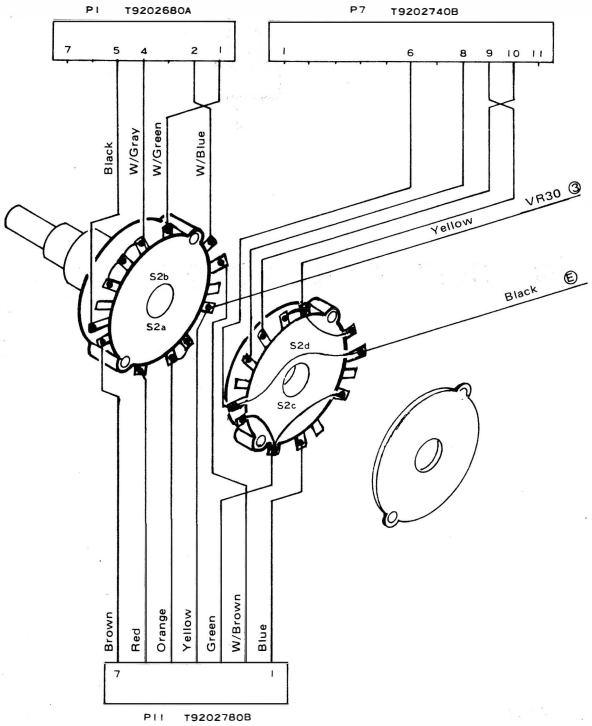

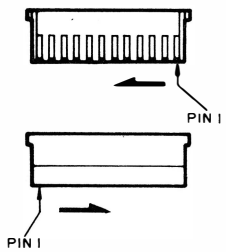

POTENTIOMETER ASSEMBLIES

MIC GAIN/CARRIER CONTROL ASSEMBLY

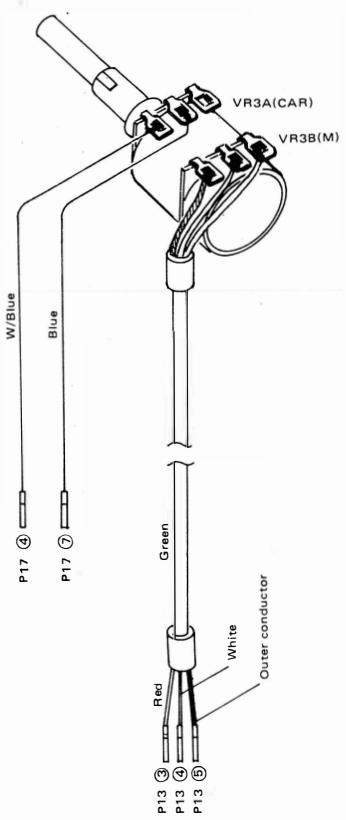

RF/AF GAIN CONTROL ASSEMBLY

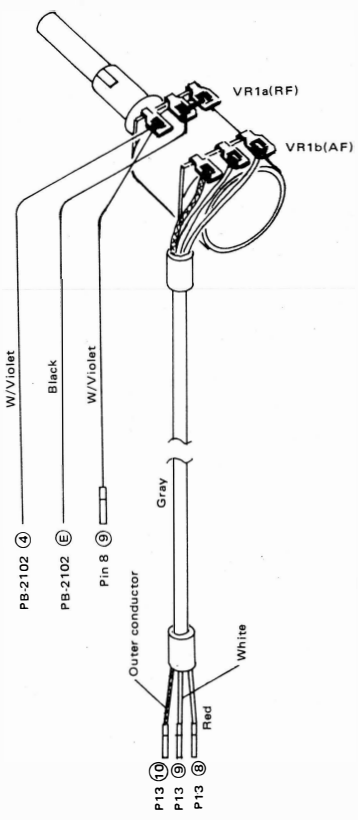

CLARIFIER/BAND WIDTH CONTROL ASSEMBLY

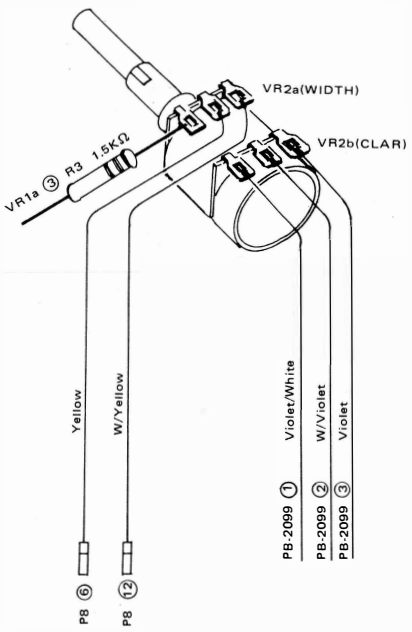

MEMO

SECTION 4—REPAIR PARTS

PARTS LIST AND ORDERING DATA 4-1
PARTS LIST 4-5

PARTS LIST AND ORDERING DATA

If you live in the United States, you may order parts from Yaesu Electronics Corporation. In other countries, you should order parts from the Yaesu agent for your country. In countries where Yaesu is not currently represented, you may order spare parts directly from Yaesu Musen Company, Ltd. in Tokyo.

When ordering, please specify the exact model number of the transceiver that the part is for. Many parts are standard, such as resistors and disc ceramic capacitors, but you should use particular care when ordering such items as electrolytics, tantalum capacitors, and the like.

The parts list to follow identifies the board that the parts belong to, as well as the circuit designation and part description. A "Part Number" is also specified, and this number will allow immediate identification by our parts department of the item you require. (*See note below.)

Shipment of parts from Yaesu USA is usually made by UPS, COD. Allow at least a week for the parts department to process your order.

PARTS ORDER EXAMPLE

QUANTITY	TRANSCEIVER IDENTIFICATION	LOCATION	*PART NUMBER	CIRCUIT DESIGNATION
1	FT-707	PB-2093A	G4800730G	Q_{1001} 3SK73GR

(cut here)

YAESU MUSEN COMPANY, LTD. – C.P.O. BOX 1500, TOKYO, JAPAN
YAESU ELECTRONICS CORPORATION – 6851 Walthall Way, Paramount, CA 90723
YAESU ELECTRONICS CORPORATION – 9812 Princeton-Glendale Rd., Cincinnati, OH 45246

ORDER BLANK

QUANTITY	TRANSCEIVER IDENTIFICATION	LOCATION	PART NUMBER	CIRCUIT DESIGNATION

I authorize shipment via: ☐ Best Way ☐ Parcel Post ☐ UPS ☐ Other

Ship To:
(Print or Type)

Name: _____
Address: _____
City: _____ State: _____ Zip: _____
Country: _____

YAESU MUSEN COMPANY, LTD. – C.P.O. BOX 1500, TOKYO, JAPAN
YAESU ELECTRONICS CORPORATION – 6851 Walthall Way, Paramount, CA 90723
YAESU ELECTRONICS CORPORATION – 9812 Princeton-Glendale Rd., Cincinnati, OH 45246

ORDER BLANK

QUANTITY	TRANSCEIVER IDENTIFICATION	LOCATION	PART NUMBER	CIRCUIT DESIGNATION

I authorize shipment via: ☐ Best Way ☐ Parcel Post
☐ UPS ☐ Other

Ship To:
(Print or Type)

Name: _____
Address: _____
City: _____ State: _____ Zip: _____
Country: _____

(cut here)

YAESU MUSEN COMPANY, LTD. – C.P.O. BOX 1500, TOKYO, JAPAN
YAESU ELECTRONICS CORPORATION – 6851 Walthall Way, Paramount, CA 90723
YAESU ELECTRONICS CORPORATION – 9812 Princeton-Glendale Rd., Cincinnati, OH 45246

ORDER BLANK

QUANTITY	TRANSCEIVER IDENTIFICATION	LOCATION	PART NUMBER	CIRCUIT DESIGNATION

I authorize shipment via: ☐ Best Way ☐ Parcel Post
☐ UPS ☐ Other

Ship To:
(Print or Type)

Name: _____
Address: _____
City: _____ State: _____ Zip: _____
Country: _____

PARTS LIST

MAIN CHASSIS

Symbol No.	Part No.	Description
		IC
Q1	G1090065	μPC14305
Q2	G1090070	μPC14308
		DIODE
D1,2	G2090001	Si 10D1
D3	G2090142	LED TLR-226
		RESISTOR
R4	J01245560	Carbon film 1/4W TJ 56Ω
R8	J01245680	" " " " 68Ω
R7	J01245151	" " " " 150Ω
R3	J01245152	" " " " 1.5kΩ
R6	J10276479	" composition
		1/2W GK 4.7Ω
R1	J10276100	" " " " 10Ω
R2	J10276101	" " " " 100Ω
		POTENTIOMETER
VR1	J62800043	DM10A668A-5KB-5KA
VR2	J62800044	DM10E572A-5KBX2
VR3	J62800045	DM10A667A-5KA-5KB
VR4	J60800069	DM10A624C-20KB
		CAPACITOR
C2	K13170103	Ceramic 50WV 0.01μF
C3,4	K13170473	" " 0.047μF
C1	K40120338	Electrolytic 25WV 3300μF
		SPEAKER
SP1	M4090027	4Ω 3W SS70
		INDUCTOR
L1	L1190001	250μH
		CHOKE COIL
CH1	L2030017	1.7mH
		RELAY
RL1	M1090010	FRL-263D012/02CK-0E
		SWITCH
S1	N2090024	8H2011 (without Switch Lever)
S2	N0190014	SRN2045N
S3	N0190001	SRN202CN
	S6000020	SWITCH LEVER, GRAY (for S1)
		RECEPTACLE
J1	P1090134	SG7627
J2	P1090004	SG7814
J3	P0090158	FM214-8SS
J4	P1090005	SG8050
J5	P1090028	MBR06B
J6	P1090152	D8-703B-11
J7	P1090034	D7-701B-00
J8	P0090026	QS-IB4M
J9,10,11	P1090133	STR-01H

		PLUG
P1	P1090074	5047-07A
P10	P1090153	PI051-04F
P16,18	P1090154	PI051-05F
P2,3,9,14,19	P1090155	PI051-06F
P11,12	P1090156	PI051-07F
P4,5	P1090158	PI051-09F
P17	P1090159	PI051-10F
P7,13	P1090160	PI051-11F
P6,8	P1090161	PI051-12F
P15	P1090162	PI091-13F
P21	P1090186	3021-03A
	S6000060	Speaker terminal

RF UNIT

Symbol No.	Part No.	Description
PB-2093B	C0020930	PCB with Components
	F0002093B	Printed Circuit Board
		IC, FET & TRANSISTOR
Q1006	G1090062	IC SN76514N
Q1008	G2090135	Diode Quad ND487C2-3R
Q1001,1002	G4800730	FET 3SK73GR
Q1013	G3303800Y	TR 2SC380TM-Y
Q1005,1007	G3318150Y	" 2SC1815Y
Q1010,1011	G3319230R	" 2SC1923R
Q1004	G3319590Y	" 2SC1959Y
Q1009,1012	G3324070	" 2SC2407
Q1003	G3090010	" 2N4427
		DIODE
D1001–1003, 1005,1007, 1009,1011, 1013,1015, 1017, 1019–1021, 1027,1029, 1031,1033, 1035,1037, 1039,1041, 1042–1061, 1070,1071, 1072	G2090027	Si 1SS53
D1062–1069	G2090001	Si 10D1
D1004,1006, 1008,1010, 1012,1014, 1016,1018, 1022–1025, 1032,1034, 1036,1038, 1040	G2010070	GB 1S1007
D1026,1028, 1030	G2090029	Ge 1N60
D1073–1075	G2015550	Si 1S1555
		RESISTOR
R1011,1064	J00245479	Carbon film 1/4W VJ 4.7Ω

R1101,1126	J00245479	Carbon film 1/4W VJ 4.7Ω	
R1055,1057, 1058,1067, 1091	J00245100	" " " " 10Ω	
R1118,1119	J00245150	" " " " 15Ω	
R1050,1053	J00245180	" " " " 18Ω	
R1032	J00245470	" " " " 47Ω	
R1066	J00245560	" " " " 56Ω	
R1071,1120	J00245680	" " " " 68Ω	
R1007	J00245820	" " " " 82Ω	
R1028,1031, 1070,1072, 1073,1076 1104,1124, 1125	J00245101	" " " " 100Ω	
R1056	J00245121	" " " " 120Ω	
R1065,1102	J10276151	Carbon composition 1/2W " 150Ω	
R1012,1063, 1092,1100, 1103	J00245221	Carbon film 1/4W VJ 220Ω	
R1013,1014, 1016, 1018–1020, 1021,1022,	J01245221	" " " TJ 220Ω	
R1002,1008, 1049,1051, 1052,1054	J00245271	" " " " 270Ω	
R1090,1095	J00245331	" " " " 330Ω	
R1122	J00245471	" " " VJ 470Ω	
R1009,1062,	J00245561	" " " VJ 560Ω	
R1048	J00245681	" " " " 680Ω	
R1010,1027, 1029,1033, 1035,1042, 1044,1047, 1059,1060, 1079,1086, 1087,1098, 1110, 1112–1117	J00245102	" " " " 1kΩ	
R1036, 1038–1041, 1043,1045, 1046, 1080–1087,	J01245102	" " " TJ 1kΩ	
R1003,1004, 1061,1077, 1097,1099, 1128	J00245152	" " " VJ 1.5kΩ	
R1121,1123	J00245182	" " " VJ 1.8kΩ	
	J00245222	" " " VJ 2.2kΩ	
R1001,1075	J00245472	" " " " 4.7kΩ	
R1005,1006, 1037,1074, 1078,1089, 1094,1105, 1107,1108	J00245103	" " " " 10kΩ	
R1109	J01245103	" " " TJ 10kΩ	
R1017,1106	J00245153	" " " VJ 15kΩ	
R1015,1093	J00245223	" " " " 22kΩ	
R1088	J00245333	" " " " 33kΩ	
	J00245473	" " " " 47kΩ	
R1024,1034	J00245563	Carbon film 1/4W VJ 56kΩ	
R1025	J00245394	" " " " 390kΩ	
R1030	J00245564	" " " " 560kΩ	
R1023	J00245225	" " " " 2.2MΩ	
		CAPACITOR	
C1032,1036, 1171,1172, 1175,1176	K02172040	Ceramic 50WV NPO 4pF	
C1068, 1153,1154	K02172050	" " " 5pF	
C1055,1173, 1174	K02173060	" " " 6pF	
C1166	K02173070	" " " 7pF	
C1060,1061	K02173080	" " " 8pF	
C1064	K02173090	" " " 9pF	
C1056,1069, 1155	K02173100	" " " 10pF	
C1148	K02175120	" " " 12pF	
C1052,1169, 1170	K02175150	" " " 15pF	
C1043,1165	K02179009	" " " 22pF	
C1049	K02175330	" " " 33pF	
C1043	K02175390	" " " 39pF	
C1107	K02179016	" " " 51pF	
C1046,1074, 1075	K02175560	" " " 56pF	
C1164,1167, 1168	K02175680	" " " 68pF	
C1003,1010, 1012,1026	K02175820	" " " 82pF	
C1030,1040	K00175101	" " SL 100pF	
C1025	K02175121	" " NPO 120pF	
C1027	K02179027	" " " 270pF	
C1028	K02175151	" " " 150pF	
C1111	K30176151	Dipped mica " 150pF	
C1109	K30176331	" " 330pF	
C1119	K30176391	" " 390pF	
C1105	K30176431	" " 430pF	
C1091,1092, 1184	K30176471	" " 470pF	
C1101	K30176681	" " 680pF	
	K30276102	" " 1000pF	
C1097,1099, 1103	K50177102	Mylar " 1000pF	
C1001	K50177103	" " 0.01μF	
C1002,1035, 1089	K50177473	" " 0.047μF	
C1005–1009, 1011, 1014–1016, 1021–1024, 1027,1033, 1034,1037, 1038,1039, 1041,1042, 1044,1045, 1047,1048, 1050,1051, 1053,1054, 1057,1058, 1062,1063, 1065,1066, 1070–1073, 1076–1088, 1090	K13170103	Ceramic " 0.01μF	

C1093–1096, 1113–1118, 1121–1123, 1125–1130, 1132–1136, 1156, 1182	K13170103	Ceramic 50WV	0.01μF
C1013,1017, 1020,1029, 1031,1098, 1100,1102, 1104,1106, 1108,1110, 1112, 1137–1147, 1150,1159, 1177,1178, 1179	K13170473	" "	0.047μF
C1149,	K14179003	" "	0.1μF
C1018,1162, 1163,1180	K40129004	Electrolytic 16WV (16 RE 10)	10μF
C1161	K40129016	" " "	22μF
C1157,1158, 1181	K40129008	" " "	33μF
C1160	K40109002	" " 10WV	47μF
	K40170105	" " 50WV	1μF
C1183	K40170475	Electrolytic 50WV	4.7μF
C1151,1152	K70127226	Tantalum 16WV	22μF
C1019	K19149021	UAT08X473K-L45AE	0.047μF
		INDUCTOR	
L1001	L0020491	LPF Coil	
L1016	L0020625	"	
L1015	L1190005	FL4H-1R0M	1μH
L1010	L1190007	FL4H1R8M	1.8μH
L1012	L1190005	FL4H2R2M	2.2μH
L1017	L1190011	FL4H4R7M	4.7μH
L1013,1014	L1190023	FL5H220K	22μH
L1002,1008,	L1190033	FL5H820K	82μH
L1018,1019	L1190020	FL5H151K	150μH
L1004–1007	L1190038	FL5H271K	270μH
		TRANSFORMER	
T1001	L0020178		
T1003,1006, 1011,1012, 1017,1018	L0020783		
T1004,1013, 1014	L0020781		
T1005,1015, 1016	L0020782		
T1007,1009, 1019,1020, 1023,1024	L0020784		
T1008,1010, 1021,1022, 1025,1026	L0020785		
T1027,1028	L0020788A		
T1029	L0020789A		
T1032,1033	L0020501		
T1034,1035	L0020502		
T1030,1031, 1036,1037	L0020504		
T1038,1039	L0020505		

T1040,1041 1042,1043	L0020506		
T1044,1055	L0020633		
		RECEPTACLE	
J1001,1002	P0090134		PI051-06M
J1003,1004	P0090137		PI051-09M
J1005	P0090140		PI051-12M
	Q5000011	Wrapping terminal C	
IF UNIT			
Symbol No.	Part No.	Description	
PB-2094B	C0020940	PCB with Components	
	F0002094B	Printed Circuit Board	
		FET, IC & TRANSISTOR	
Q2001,2004, 2005,2008	G4800730G	FET	3SK73GR
Q2002,2003, 2020	G3090035	"	2SK19TM-GR
Q2007	G3090019	"	J310
Q2021,2025	G3107331P	TR	2SA733A-P
Q2015	G3305350A	"	2SC535A
Q2010,2011	G3315830G	"	2SC1583G
Q2023,2024	G3318150G	"	2SC1815GR
Q2009,2012, 2013, 2016–2019, 2022	G3318150Y	"	2SC1815Y
Q2006	G3319590Y	"	2SC1959Y
Q2014	G3090005	"	MPS-A13
Q2026	G1090123	IC	78L08
		DIODE	
D2017–2020, 2023–2025	G2090029	Ge	1N60
D2028	G2090093	Ge	1N270
D2001,2003, 2009–2014	G2010070	Ge (GB)	1S1007
D2004,2015, 2016,2027, 2029–2032	G2015550	Si	1S1555
D2022	G2090001	Si	10D1
D2005,2006, 2026	G2090027	Si	1SS53
D2002	G2090040	Varactor	FC63
D2021	G2022090	"	1S2209
		CRYSTAL	
X2001	H0100433	HC-18/U	19.7475MHz
		CRYSTAL FILTER	
XF2001	H1100470	8.9875MHz	8.9M20
XF2002	H1102010	10.76MHz	XF10GW
XF2003	H1100860	8.9875MHz	XF8.9HS
XF2004 (OPTION)	H1100880	"	XF8.9HC

XF2004 (OPTION)	H1102019	8.9875MHz XF8.9HCN
		RESISTOR
R2077,2105	J00245220	Carbon film 1/4W VJ 22Ω
R2012,2017, 2022,2027, 2033,2036, 2052,2060, 2065,2070, 2082,2084	J00245101	" " " " 100Ω
R2056	J01245101	" " " TJ 100Ω
R2049	J00245151	" " " VJ 150Ω
R2042,2044	J00245181	" " " " 180Ω
R2055	J01245221	" " " TJ 220Ω
R2011,2045, 2083	J00245331	" " " VJ 330Ω
R2058,2062, 2047,2087, 2124	J00245471	" " " " 470Ω
R2010,2026, 2116,2125	J00245561	" " " " 560Ω
R2015,2016, 2043,2046	J00245681	" " " " 680Ω
R2040,2041	J01245681	" " " TJ 680Ω
R2009, 2030–2032, 2047,2053, 2059,2063, 2068,2089, 2093,2099, 2101,2107, 2118	J00245102	" " " VJ 1kΩ
R2100	J00245152	" " " " 1.5kΩ
R2003,2004, 2057,2076, 2120,2122, 2123	J00245222	" " " " 2.2kΩ
	J01245222	" " " TJ 2.2kΩ
R2007	J00245272	" " " VJ 2.7kΩ
R2061,2104	J00245332	" " " " 3.3kΩ
R2067	J00245472	" " " " 4.7kΩ
R2109	J00245512	" " " " 5.1kΩ
R2018,2028, 2064,2069, 2071,2106	J00245562	" " " " 5.6kΩ
R2094,2108	J00245682	" " " " 6.8kΩ
R2001,2002, 2020,2025, 2037–2039, 2072,2075, 2078,2086, 2092,2097, 2098,2102, 2113,2115, 2121	J00245103	" " " " 10kΩ
R2023,2114	J00245123	" " " VJ 12kΩ
R2051,2066, 2080,2081,	J00245153	" " " " 15kΩ
R2074,2085	J00245223	" " " " 22kΩ
R2103	J01245223	" " " TJ 22kΩ
R2029	J00245333	" " " VJ 33kΩ
R2008,2024, 2079	J00245473	" " " " 47kΩ
R2019	J01245473	" " " TJ 47kΩ
R2073	J00245563	" " " VJ 56kΩ

R2013,2014, 2054	J01245104	Carbon film 1/4W TJ 100kΩ
R2088,2090	J00245184	" " " VJ 180kΩ
	J00245474	" " " " 470kΩ
R2095	J00245155	" " " " 1.5MΩ
R2119	J00245565	" " " " 5.6MΩ
		POTENTIOMETER
VR2001,2002, 2005	J51723472	SR19R 4.7kΩ
VR2003,2006	J51723103	" 10kΩ
VR2004	J51723473	" 47kΩ
		THERMISTOR
TH2001,2003	G9090003	D33A
TH2002	G9090009	32D27
		CAPACITOR
C2058	K00172030	Ceramic 50WV SL 3pF
C2077	K00173100	" " " 10pF
C2112	K00175150	" " " 15pF
C2065,2080, 2122	K00175330	" " " 33pF
C2072,2075	K06175330	" " UJ 33pF
C2071	K06175390	" " " 39pF
C2049	K00175470	" " SL 47pF
C2015,2020, 2047,2081, 2097	K00175101	" " " 100pF
C2069	K06175101	" " UJ 100pF
C2001,2066, 2082,2098	K00175221	" " SL 220pF
C2062	K00175331	" " " 330pF
C2043	K10176102	" " " 0.001μF
C2017,2018, 2023	K19149013	" 25WV 0.01μF
C2004,2006, 2008,2009, 2012,2013, 2014,2016, 2019,2021, 2022,2024, 2026,2027, 2029–2034, 2036–2038, 2040–2042, 2044,2045, 2046,2048, 2052–2057, 2059–2061, 2064,2068, 2070,2073, 2074,2076, 2078,2092, 2096, 2099–2101, 2103, 2104,2105, 2108–2111, 2113,2116, 2170,2122, 2123	K13170103	" 50WV 0.01μF
C2079	K13170222	" " 0.022μF

C2003,2010, 2011,2035, 2039,2106 2117–2119	K13170473	Ceramic 50WV	0.047μF
C2028,2050, 2051,2083, 2086,2088, 2093,2094, 2095,2107, 2123	K19149021	" 25WV (UAT08X473K-L45AE)	0:047μF
C2063	K40170105	Electrolytic 50WV	1μF
C2025	K40170335	" 50WV	3.3μF
C2005,2084, 2091	K40120106	" 16WV	10μF
C2121	K40100336	" 10WV	33μF
C2089	K70127224	Tantalum 16WV	0.22μF
		INDUCTOR	
L2009	L0020145	VXO	5.2μH
L2003,2008	L1190023	FL5H-220K	22μH
L2014	L1190029	FL5H-470K	47μH
L2013	L1190030	FL5H-560K	56μH
L2001,2002, 2005,2007, 2010,2015	L1190016	FL5H-101K	100μH
L2011,2016	L1190020	FL5H-151K	150μH
L2012	L1190017	FL5H-102K	1mH
		TRANSFORMER	
T2001,2003, 2004,2010, 2012	L0020141	4171	
T2002,2008, 2009,2011, 2013,2014	L0020140	4170	
T2005	L0020150	4074	
T2006	L0020460		
T2007	L0020209		
		RELAY	
RL2001	M1190002	FBR211AD012-M	
		RECEPTACLE	
J2003	P0090134	PI051-06M	
J2001	P0090139	PI051-11M	
J2002	P0090140	PI051-12M	
	Q5000011	Wrapping terminal C	

AF UNIT

Symbol No.	Part No.	Description	
PB-2095B	C0020950	PCB with Components	
	F0002095B	Printed Circuit Board	
		IC, FET & TRANSISTOR	
Q3001	G1090123	IC	78L08
Q3022	G1090284	"	μPC2002V
Q3037	G1090064	"	F4024
Q3004	G3090035	FET	2SK19TM-GR
Q3008	G3800301Y	"	2SK30A-Y
Q3019	G3104960Y	TR	2SA496Y
Q3002,3013, 3017,3040	G3107331Q	TR	2SA733A-Q
Q3025–3036, 3038	G3303800Y	"	2SC380TM-Y
Q3006	G3090032	"	2SC732TM-GR
Q3003,3005, 3007,3010, 3011,3012, 3014–3016, 3018,3020, 3021,3023, 3024,3039	G3318150Y	"	2SC1815Y
Q3009	G3319590Y	"	2SC1959Y
		DIODE	
D3014,3015, 3048	G2090029	Ge	1N60
D3001,3012, 3042	G2010070	Ge (GB)	1S1007
D3017	G2090001	Si	10D1
D3002–3006, 3011,3013, 3016, 3018–3041, 3043–3046	G2015550	Si	1S1555
D3007–3010	G2090118	Schottky barrier	1SS97
		CRYSTAL	
X3001	H0100421	HC-18/U	8.986MHz
X3002	H0100423	"	8.989MHz
X3003	H0100422	"	8.9883MHz
X3004	H0101560	"	24.4875MHz
X3005	H0102266	"	17.9845MHz
X3006	H0102267	"	21.4845MHz
X3007	H0101500	"	28.4875MHz
X3008	H0101510	"	35.4875MHz
X3009	H0101520	"	42.4875MHz
X3010	H0101530	"	42.9875MHz
X3011	H0101540	"	43.4875MHz
X3012	H0101550	"	43.9875MHz
X3013	H0102295	"	32.4875MHz
X3014	H0102296	"	38.9875MHz
X3015	H0102293	HC 14W	3200kHz
		CRYSTAL SOCKET	
XS3001	P3090029		4P
XS3002	P3090042		3P
		RESISTOR	
R3082	J31276010	Wire wound 1/2W	1Ω
R3080	J00245229	Carbon film 1/4W VJ	2.2Ω
R3076	J00245180	" " " "	18Ω
R3033	J00245820	" " " VJ	82Ω
R3001,3020, 3097,3101, 3105,3109, 3113,3117, 3121,3125, 3129,3133, 3137,3141, 3160, 3163–3170, 3179	J00245101	" " " "	100Ω
R3008,3010, 3144	J00245151	" " " "	150Ω
R3011,3012	J00245221	" " " "	220Ω

R3081,3149, 3159,3176	J00245221	Carbon film	1/4W	VJ	220Ω
R3161,3162, 3178	J00245331	"	"	"	330Ω
R3100,3104, 3108,3112, 3116,3120, 3124,3128, 3132,3136, 3140	J00245391	"	"	"	390Ω
R3143	J01245471	"	"	TJ	470Ω
R3013,3032, 3040,3062, 3153	J00245471	"	"	"	470Ω
R3005,3023, 3048,3050, 3055,3071, 3077,3091, 3094,3148, 3151,3169	J00245102	"	"	"	1kΩ
R3142	J01245122	"	"	TJ	1.2kΩ
R3049,3051, 3147	J00245222	"	"	VJ	2.2kΩ
R3173	J00245272	"	"	"	2.7kΩ
R3004,3014, 3022,3037, 3047,3054, 3075, 3084–3090, 3098,3102, 3106,3110, 3114,3118, 3122,3126, 3130,3134, 3138,3154	J00245332	"	"	"	3.3kΩ
R3021,3039	J00245392	"	"	"	3.9kΩ
R3007,3009, 3035,3036, 3057,3061, 3063,3078, 3156	J00245472	"	"	"	4.7kΩ
R3002,3003, 3068,3069, 3072,3152	J00245682	"	"	"	6.8kΩ
R3017	J00245822	"	"	"	8.2kΩ
R3027,3029, 3043,3044, 3056,3059, 3064,3066, 3067,3083, 3093,3146, 3155,3157, 3158,3171, 3174,3175, 3079	J00245103	"	"	"	10kΩ
R3019,3031, 3046,3053	J00245123	"	"	VJ	12kΩ
R3016,3034, 3060,3074, 3096,3099, 3103,3107, 3111,3115, 3119,3123, 3127,3131, 3135,3139	J00245153	"	"	"	15kΩ

R3038,3041, 3042,3058, 3092,3095, 3145,3150	J00245223	Carbon film	1/4W	VJ	22kΩ
R3018,3024, 3045,3052	J00245333	"	"	"	33kΩ
R3015,3026, 3030	J00245473	"	"	"	47kΩ
R3073	J00245563	"	"	"	56kΩ
R3006,3025	J00245104	"	"	"	100kΩ
R3070	J00245184	"	"	"	180kΩ
		POTENTIOMETER			
VR3001	J51727101	CR19R			100Ω
VR3002	J51723103	SR19R			10kΩ
VR3003	J51723471				470Ω
		CAPACITOR			
C3137	K00172060	Ceramic	50WV	SL	6pF
C3068,3070, 3072,3074, 3076,3078, 3080	K02175150	"	"	NPO	15pF
C3160	K02175180	"	"	"	18pF
C3014	K02179008	"	"	"	20pF
C3138	K00175220	"	"	SL	22pF
C3133	K02179011	"	"	NPO	27pF
C3004–3006, 3109,3113 3117,3121	K02175390	"	"	"	39pF
C3105	K02175560	"	"	"	56pF
C3010,3011, 3093,3101	K02175101	"	"	"	100pF
C3129	K02175510	"	"	"	51pF
C3125	K02175820	"	"	"	82pF
C3089	K02175121	"	"	NPO	120pF
C3009,3097	K02175151	"	"	"	150pF
C3016	K00175221	"	"	"	220pF
C3135	K00175271	"	"	"	270pF
C3140,3156, 3157,3159	K12171102	"	"		0.001μF
C3001–3003, 3007,3008, 3012,3013, 3015,3035, 3067,3069, 3071,3073, 3075,3077, 3079,3081, 3085–3088, 3090–3092, 3094–3096, 3098–3100, 3102–3104, 3016–3108, 3110–3112, 3114, 3116, 3118–3120, 3122,3123, 3124,3115, 3126–3128, 3130,3131, 3136,3149, 3150, 3152–3155, 3158,3161, 3162	K13170103	"	"		0.01μF

C3026,3050, 3132,3143, 3139	K13170473	Ceramic	50WV	0.047μF
C3083,3084	K30176101	Dipped Mica	"	100pF
C3151	K30176151	" "	"	150pF
C3082	K30176331	" "	"	330pF
C3115	K30176471	" "	"	470pF
C3134	K30176511	" "	"	510pF
C3057	K50177102	Mylar	"	0.001μF
C3023	K50177222	"	"	0.0022μF
C3054	K50177472	"	"	0.0047μF
C3037,3038, 3041,3046, 3055	K50177103	"	"	0.01μF
C3031–3033, 3036,3053	K50177223	"	"	0.022μF
C3017	K50177473	"	"	0.047μF
C3062,3066	K50177104	"	"	0.1μF
C3019,3021, 3022,3027, 3028,3039, 3042,3044, 3047,3051, 3052,3056, 3059,3060	K40170105	Electrolytic	"	1μF
C3148	K40170225	"	"	2.2μF
C3034,3049, 3142,3146	K40140475	"	25WV	4.7μF
C3020,3040, 3045,3058, 3145,3147	K40120106	"	16WV	10μF
C3024,3029, 3144	K40120226	"	"	22μF
C3018,3025, 3048	K40120336	"	"	33μF
C3030,3141	K40100107	(10RE100)	10WV	100μF
C3061, 3063–3065	K40120227	"	16WV	220μF
C3043	K70127475	Tantalum	10WV	10μF
		TRIMMER CAPACITOR		
TC3001–3003, 3012	K91000013	ECV1ZW-20x32, 20pF		
TC3005–3011	K91000016	ECV1ZW-50x32, 50pF		
TC3004	K91000012	ECV1ZW 10x32 10pF		
		INDUCTOR		
L3005	L1190023	FL5H-220K		22μH
L3001–3004, 3006,3007	L1190016	FL5H-101K		100μH
L3008	L1190017	FL5H-102K		1mH
		TRANSFORMER		
T3001	L0020209	4:1		
T3002, 3004–3012	L0020628			
T3003	L0020787			
		RELAY		
RL3001	M1190002	FBR211AD012-M		

		RECEPTACLE
J3001	P0090132	PI051-04M
J3005	P0090134	PI051-06M
J3002,3003	P0090135	PI051-07M
J3007	P0090138	PI051-10M
J3004	P0090139	PI051-11M
J3006	P0090141	PI051-13M

LPF UNIT

Symbol No.	Part No.	Description
	C0021280	LPF UNIT ASSEMBLY
	C9021090	CONNECTOR A BOARD (W/C)
	C9021100	CONNECTOR B BOARD (W/C)
	C9021280	LPF BOARD with components
PB-2109A	F0002109A	Printed Circuit Board
PB-2110A	F0002110A	" " "
PB-2128	F0002128	" " "
	★★★★★ LPF BOARD ★★★★★	
PB-2128	F0002128	Printed Circuit Board
		DIODE
D4001, 4008–4012	G2015550	Si 1S1555
D4002–4007	G2090038	Schottky barrier 1SS16
D4013,4014	G2090001	Si 10D1
		RESISTOR
R4002	J00245470	Carbon film 1/4W VJ 47Ω
R4001,4003	J00245471	" " " " 470Ω
	J00245102	" " " " 1kΩ
		POTENTIOMETER
VR4001	J50710203	V10K-8-1-2 20kΩ
		CAPACITOR
C4034–4040, 4062–4073	K13170103	Ceramic 50WV 0.01μF
C4001, 4041–4050, 4074–4081	K13170473	" " 0.047μF
C4014,4024, 4030	K30279064	Dipped Mica 500WV 10pF
C4025,4031	K30279016	" " " 12pF
C4022	K30279065	" " " 15pF
	K30279118	" " " 18pF
C4018,4021	K30279100	" " " 20pF
C4010,4028	K30279069	" " " 33pF
C4012	K30279115	" " " 36pF
C4003	K30279070	" " " 39pF
C4016	K30279071	" " " 56pF
C4027	K30279072	" " " 68pF
C4009,4032	K30279114	" " " 75pF
C4006	K30279073	" " " 82pF
C4020	K30279074	" " " 100pF
C4026	K30279111	" " " 110pF
C4029	K30279077	" " " 150pF
C4015	K30279079	" " " 180pF
C4019	K30279080	" " " 200pF
C4023	K30279081	" " " 220pF

C4004	K30279082	Dipped Mica 500WV 240pF
C4008,4033	K30279085	" " " 330pF
C4013,4017	K30279086	" " " 360pF
C4002	K30279089	" " " 510pF
C4007,4011	K30279113	" " " 680pF
C4005	K30279095	" " " 1200pF
C4051–4061	K21170002	Feed thru 50WV 1000pF
		TRIMMER CAPACITOR
TC1001	K91000019	ECV1ZW-10x40, 10pF
		INDUCTOR
L4001	L0020615	
L4002	L0020616	
L4003	L0020617	
L4004	L0020618	
L4005	L0020854	
L4006	L0020855	
L4007	L0020621	
L4008	L0020622	
L4009	L0020623	
L4010	L0020624	
		TRANSFORMER
T4001	L0020301A	
		RELAY
RL4001–4011	M1190024	FBR311D012
★★★★★ CONNECTOR A BOARD ★★★★★		
PB-2109	F0002109	Printed Circuit Board
		CONNECTOR
J4002	P0090150	PI021-06M
★★★★★ CONNECTOR B BOARD ★★★★★		
PB-2110	F0002110	Printed Circuit Board
		CONNECTOR
J4001	P0090149	PI021-05M
		CAPACITOR
C4074–4079	K13170473	Ceramic 50WV 0.047μF
	Q5000011	Wrapping terminal C
VFO UNIT		
Symbol No.	Part No.	Descriptoin
		VFO assembly (3540)
		VFO chassis
PB-2097A	F0002097A	VFO board
★★★★★ VFO CHASSIS ★★★★★		
		CAPACITOR
C4301	K06173080	Ceramic 50WV UJ 8pF
C4303	K06175120	" " " 12pF
C4304	K02175180	" " NPO 18pF

C4305	K02179013	Ceramic 50WV NPO 33pF
		VARIABLE CAPACITOR
VC4301	K90000024	C521R112
		TRIMMER CAPACITOR
TC4301	K90000001	TSN-100D15, 15pF
		INDUCTOR
L4301	L0020268	
		PILOT LAMP
PL4301,4302	Q1000035	BQ044-22836A
		FET & TRANSISTOR
Q4302	G3090035	FET 2SK19TM-GR
Q4301,4303	G3318150Y	TR 2SC1815Y
		DIODE
D4301	G2022360	Varactor 1S2236
		RESISTOR
R4309,4311	J00245101	Carbon film 1/4W VJ 100Ω
R4307	J00245221	" " " " 220Ω
R4305,4308	J00245222	" " " " 2.2kΩ
R4302	J00245332	" " " " 3.3kΩ
R4301	J00245103	" " " " 10kΩ
R4303	J00245183	" " " " 18kΩ
R4304	J00245223	" " " " 22kΩ
R4306,4310	J00245104	" " " " 100kΩ
		CAPACITOR
C4327	K02179001	Ceramic 50WV NPO 1pF
C4307	K02173080	" " " 8pF
C4314	K02179013	" " " 33pF
C4308,4318	K02175390	" " " 39pF
C4311	K02179023	" " " 180pF
C4321,4323	K00175471	" " SL 470pF
C4309,4310, 4312,4315, 4319,4320, 4324,4326	K13170103	" " " 0.01μF
C4313	K30176431	Dipped Mica " 430pF
C4302,4322	K30209001	" " " 1000pF
C4325	K70167334	Tantalum 10WV 0.33μF
		TRIMMER CAPACITOR
TC4302	K91000023	ECV-1ZW 50x40, 50pF
		INDUCTOR
L4304,4305	L1190007	FL4H-1R8M, 1.8μH
L4303,4306	L1190001	250μH
L4302	L1190040	S4 1mH
		RECEPTACLE
J4301	P0090133	PI021-05M

COUNTER UNIT (3540)

Symbol No.	Part No.	Description
	C0020861A	**COUNTER UNIT ASSEMBLY**
	C9020861A	COUNTER MAIN UNIT
	F0002086A	COUNTER MAIN BOARD
★★★★★ **COUNTER MAIN BOARD** ★★★★★		
		IC, FET & TRANSISTOR
Q4412	G1090249	IC MSM9520RS
Q4420	G1090079	" μPA54H
Q4401	G4800730	FET 3SK73GR
Q4406–4411, 4413–4419	G3109520L	TR 2SA952L
Q4403	G3316740	" 2SC1674L
Q4404	G3318150G	" 2SC1815GR
		DIODE
D4401–4413	G20155550	Si 1S1555
		CRYSTAL
X4401	H0102272	HC-18/U 6.5536MHz
		RESISTOR
R4412	J00245100	Carbon film 1/4W VJ 10Ω
R4431,4434, 4437,4440, 4443,4446, 4449	J00245330	" " " " 33Ω
R4450	J00245560	" " " " 56Ω
R4401	J01245560	" " " TJ 56Ω
R4408,4418, 4420,4422, 4424,4426, 4428	J00245101	" " " VJ 100Ω
R4407,4410, 4411	J00245221	" " " " 220Ω
R4417,4419, 4421,4423, 4425,4427, 4430,4433, 4436,4439, 4442,4445, 4448	J01245102	" " " TJ 1kΩ
R4429,4432, 4435,4438, 4441,4444, 4447	J00245152	" " " VJ 1.5kΩ
R4402,4415	J00245562	" " " " 5.6kΩ
R4413	J00245103	" " " " 10kΩ
R4409	J00245473	" " " " 47kΩ
R4404	J01245473	" " " TJ 47kΩ
R4414,4416	J01245104	" " " " 100kΩ
		CAPACITOR
C4424	K02179008	Ceramic 50WV NPO 20pF
C4425	K02175820	" " " 82pF
C4420	K02175101	" " " 100pF
C4401,4404	K13170102	" " " 0.001μF
C4402,4405, 4408,4409, 4411,4412, 4414,4415,	K13170103	" " " 0.01μF
C4417,4419, 4421, 4426–4429	K13170103	Ceramic 50WV NPO 0.01μF
C4423	K50177103	Mylar " 0.01μF
C4410,4418	K40120106	Electrolytic 16WV 10μF
C4416	K40129001	" 16WV 330μF
C4413	K40109004	" 10WV 470μF
C4422	K71137685	Tantalum 20WV 6.8μF (CC99E1D6R8M)
		TRIMMER CAPACITOR
TC4401	K91000030	ECV1ZW 40x53, 40pF
		INDUCTOR
L4401	L2030068	SN Coil 2mH
		RECEPTACLE
J4401	P0090051	5048-06A
J4402	P0090054	5048-07A
J4403	P0090037	5048-08A
		PLUG
P4403	P1090186	3021-03A
★★★★★ **DISPLAY BOARD** ★★★★★		
	C002098A	PCB with components
	F0002098A	Printed Circuit Board
		DISPLAY LED
D4501–4506	G2090069	HP5082-7623
		PLUG
P4501		5047-06
P4502		5047-08

AVR UNIT

Symbol No.	Part No.	Description
PB-2099A	C0020990	PCB with Components
	F0002099A	Printed Circuit Board
		IC TRANSISTOR & FET
Q4602	G1090070	IC μPC14308
Q4601	G3408800	TR 2SD880Y
Q4603	G3090035	FET 2SK19TM-GR
		DIODE
D4601	G2090001	Si 10D1
D4602	G2090015	Zener RD-6.2EB
		RESISTOR
R4602	J30356100	Wire wound 3W 10Ω
R4607	J00245479	Carbon film 1/4W VJ 4.7Ω
R4601	J00245330	Carbon film 1/4W 33Ω
R4603	J00245332	" " " 3.3kΩ
R4604,4606	J00245682	" " " 6.8kΩ
R4605	J00245123	" " " 12kΩ
	J00245153	" " " 15kΩ
		POTENTIOMETER
VR4601	J50710502	V10K8-1-2 5kΩB

		CAPACITOR			
C4606–4610, 4614	K13170473	Ceramic	50WV	0.047μF	
C4604	K50177104	Mylar	"	0.1μF	
C4605	K40109007	Electrolytic	10WV	220μF	
C4603	K40129009	"	16WV	220μF	
C4602	K40129001	"	"	330μF	
C4601	K40129011	"	"	1000μF	
C4611	K40170105	Electrolytic	50WV	1μF	
C4613	K40120106	"	16WV	10μF	
C4612	K70127224	Tantalum	16WV	0.22μF	
		RELAY			
RL4601	M1190023	FBR321D012			
RL4602	M1190006	FBR221D012			
	Q5000011	Wrapping terminal C			
INDICATOR UNIT					
Symbol No.	Part No.	Description			
PB-2100A	C0021000	PCB with Components			
	F0002100	Printed Circuit Board			
		IC			
Q4701	G1090241		TA7612AP		
		DIODE			
D4701–4705	G2090136	LED	TLG205		
D4706–4708	G2090134	"	TLY205		
D4709,4710	G2090137	"	TLR205		
D4711	G2090001	Ge	1N60		
		RESISTOR			
R4702–4706	J01245331	Carbon film	1/4W TJ	330Ω	
	J01245391	" "	" "	390Ω	
R4707–4709	J01245471	" "	" "	470Ω	
R4713	J01245102	" "	" "	1kΩ	
R4710,4711	J01245152	" "	" "	1.5kΩ	
R4712	J01245103	" "	" "	10kΩ	
R4701	J01245393	" "	" "	39kΩ	
		CAPACITOR			
C4702	K13170473	Ceramic	50WV	0.047μF	
C4701	K40129009	Electrolytic	16WV	220μF	
C4703	K13170102	Ceramic	50WV	0.001μF	
HPF (FAN MOTOR CONTROL) UNIT					
Symbol No.	Part No.	Description			
PB-2101A	C0021010	PCB with Components			
	F0002101	Printed Circuit Board			
		IC, TRANSISTOR			
Q4801	G1090246	IC	AN6552		
Q4805	G1090123	"	78L08		
Q4802,4804	G3318150Y	TR	2SC1815Y		
Q4803	G3405920Q	"	2SD592Q		
		DIODE			
D4802	G2090001	Si	10D1		
D4801,4803, 4804	G2015550	Si	1S1555		

		RESISTOR			
R4801,4811	J00245102	Carbon film	1/4W VJ	1kΩ	
R4807,4810, 4814	J00245562	" "	" "	5.6kΩ	
R4815	J00245682	" "	" "	6.8kΩ	
R4802,4809, 4812,4813	J00245103	" "	" "	10kΩ	
R4804	J00245433	" "	" "	43kΩ	
R4803,4806	J00245473	" "	" "	47kΩ	
R4805	J00245563	" "	" "	56kΩ	
R4808	J00245683	" "	" "	68kΩ	
		CAPACITOR			
C4801,4802, 4805,4806	K13170103	Ceramic	50WV	0.01μF	
C4803,4804	K70127106	Tantalum	16WV	10μF	
C4808	K30209001	Dipped mica	50WV	1000pF	
C4807,4809	K30209003	"	"	1500pF	
		INDUCTOR			
L4803,4804	L1190080	LB4B3R3J, 3.3μH			
L4801,4806	L1190093	LB4B8R2J, 8.2μH			
L4802,4805	L1190094	LB4B100J, 10μH			
		LAMP FUSE			
F4801	Q1000010	BQ041-22803A			
		RECEPTACLE			
J4801,4803	P0090120	PI051-02M			
J4802	P0090121	PI051-03M			
	Q5000011	Wrapping terminal C			
SW UNIT					
Symbol No.	Part No.	Description			
PB-2102A	C0021020	PCB with Components			
	F0002102	Printed Circuit Board			
		RESISTOR			
R4901–4903	J00245561	Carbon film	1/4W VJ	560Ω	
R4904	J01245103	" "	" "	10kΩ	
		CAPACITOR			
C4901,4902	K13170473	Ceramic	50WV	0.047μF	
C4903	K70147105	Tantalum	16WV	1μF	
		SWITCH			
S4901	N4090030	SUT71A			
VR A UNIT					
Symbol No.	Part No.	Description			
PB-2103A	C0021030	PCB with Components			
	F0002103	Printed Circuit Board			
		POTENTIOMETER			
VR5001 (VOX GAIN)	J51734103	CR19D		10kΩ	
VR B UNIT					
Symbol No.	Part No.	Description			
PB-2103A	C0021031	PCB with Components			
	F0002103	Printed Circuit Board			
		POTENTIOMETER			
VR5101 (DELAY)	J51734224	CR19D		220kΩ	

100W PA UNIT (3540)

Symbol No.	Part No.	Description
	C0020131A	PCB with Components
	F0002013A	Printed Circuit Board
		IC & TRANSISTOR
Q4206	G1090070	IC μPC14308
Q4201	G3315890	TR 2SC1589
Q4204,4205	G3322900	" 2SC2290
Q4202,4203	G3323950	" 2SC2395
Q4207	G3402880K	" 2SD288K
		DIODE
D4201	G2090021	Zener YZ-033
D4202–4205	G2090002	Si 10D10
		RESISTOR
R4209,4211, 4216,4218	J10276159	Carbon composition 1/2W 1.5Ω
R4206	J10276479	" " " 4.7Ω
R4207,4219, 4220	J10276180	" " " 18Ω
R4212,4213	J10276240	" " " 24Ω
R4202	J00245330	Carbon film 1/4W VJ 33Ω
R4210	J10276390	Carbon composition 1/2W 39Ω
R4217,4221, 4222	J20335390	Metallic film 2W 39Ω
R4223	J20335680	" " " 68Ω
R4214,4215	J10276121	Carbon composition 1/2W 120Ω
R4201	J00245121	Carbon film 1/4W VJ 120Ω
R4203,4204	J10276331	Carbon composition 1/2W 330Ω
R4224	J00245271	Carbon film 1/4W VJ 270Ω
R4208	J10276102	Carbon composition 1/2W 1kΩ
R4205	J01245152	Carbon film 1/4W TJ 1.5kΩ
		THERMISTOR
TH4201	G9090009	32D27
		POTENTIOMETER
VR4201	J51727222	CR19R 2.2kΩB
		CAPACITOR
C4205,4206	K10179017	Ceramic 50WV 0.0047μF
C4202	K10176103	" " 0.01μF
C4210,4211, 4216,4236	K10177103	" " 0.01μF
C4201,4203, 4207,4208, 4212,4214, 4217,4219, 4221,4223, 4226,4230, 4231	K13170473	Ceramic 50WV 0.047μF
C4204,4209	K23170005	" chip " 0.1μF
C4237	K14179003	" " 0.1μF
C4235	K30279045	Dipped mica 500WV 56pF
C4243	K30279090	" " " 560pF
C4232,4234	K30279122	" " " 470pF
C4233	K30279046	" " " 620pF
C4228	K30279092	" " " 750pF
C4227,4229	K30279118	" " " 5000pF
C4238	K40169003	Electrolytic 35WV 330μF
C4222	K70127335	Tantalum 16WV 3.3μF
C4213,4215, 4218,4220, 4224,4225, 4242	K70127106	" " 10μF
C4240,4041	K50177683	Mylar 50WV 0.068μF
C4239	K50177104	" " 0.1μF
		INDUCTOR
L4201–4204	L1020035A	
L4206	L0020395A	
L4205,4207	L1020015	
		TRANSFORMER
T4201	L0020289A	INPUT
T4202	L0020631B	DRIVER
T4203	L0020632	OUTPUT
		MOTOR
	M2190004	MDN-7R1
	R7056970	**RADIAL FAN**
		PLUG
P4202	P1090187	PI051-02F
P4203	P1090188	PI051-03F
	Q5000011	Wrapping terminal C

LED UNIT

Symbol No.	Part No.	Description
	C0021110A	PCB with Components
	F0002111A	Printed Circuit Board
		LED
D5201–5204	G2090134	TLY-205
		RESISTOR
R5201	J01245561	Carbon film 1/4W TJ 560Ω

ACCESSORIES

Symbol No.	Part No.	Description
	T9012920	**DC POWER CORD ASS'Y.**
	P1090042	CONNECTOR PLUG QMS-P4-FK
	Q0000009	FUSE 20A

RF UNIT		
Symbol No.	Parts No.	Description
PB-2201	F0002201	Printed Circuit Board
	C0022010	PCB with Components
		IC, FET & TRANSISTOR
Q1006	G1090062	IC SN76514N
Q1008	G2090135	Diode Quad ND487C2-3R
Q1001,1002	G4800730G	FET 3SK73GR
Q1013	G3303800Y	TR 2SC380TM-Y
Q1005,1007	G3318150Y	" 2SC1815Y
Q1010,1011	G3319230R	" 2SC1923R
Q1004	G3319590Y	" 2SC1959Y
Q1003,1009, 1012	G3324070	" 2SC2407
		DIODE
D1001–1010, 1039–1040, 1044–1048, 1057–1074	G2090027	Si 1SS53
D1020,1021, 1042	G2015550	Si 1S1555
D1049–1056	G2090001	Si 10D1
D1011–1019, 1043	G2090118	Schottky Barrier 1SS97
D1022–1030, 1041	G2010070	Ge(GB) 1S1007
		RESISTOR
R1057,1072, 1075,1120	J00245479	Carbon film 1/4W VJ 4.7Ω
R1060,1112	J00245100	" " " " 10Ω
R1050,1051, 1125	J00245180	" " " " 18Ω
R1066	J00245470	" " " " 47Ω
R1090	J00245560	" " " " 56Ω
R1089	J00245680	" " " " 68Ω
R1073	J10276820	" composition 1/2W GK 82Ω
R1029,1067, 1087,1088, 1092,1098, 1099,1114, 1129	J00245101	" film 1/4W VJ 100Ω
R1058,1121	J10276151	" composition 1/2W GK 150Ω
R1016–1023	J01245221	" film 1/4W TJ 220Ω
R1059,1074, 1113,1122, 1126	J00245221	" " " VJ 220Ω
R1002,1048, 1049,1052, 1053,1069, 1123,1124	J00245271	" " " " 270Ω
R1111,1117	J00245331	" " " " 330Ω
R1095	J00245471	" " " " 470Ω
R1055,1070, 1071,1119	J00245561	" " " " 560Ω
R1091	J00245681	" " " " 680Ω
R1034–1039, 1056,1118	J00245821	" " " " 820Ω
R1024,1028, 1030	J00245102	" " " " 1kΩ
R1040–1046, 1054,1062, 1065,1068, 1100,1108	J00245102	Carbon film 1/4W VJ 1kΩ
R1047, 1101–1107	J01245102	" " " TJ 1kΩ
R1003,1004, 1084,1086	J00245152	" " " VJ 1.5kΩ
R1014	J00245332	" " " " 3.3kΩ
R1031,1032, 1093,1094	J00245182	" " " " 1.8kΩ
R1015,1130	J00245562	" " " " 5.6kΩ
R1001,1013, 1033,1096	J00245472	" " " " 4.7kΩ
R1076,1077, 1080,1083, 1085,1097, 1109,1115, 1128	J00245103	" " " " 10kΩ
R1078,1079	J01245103	" " " TJ 10kΩ
R1027	J00245153	" " " VJ 15kΩ
R1116	J00245223	" " " " 22kΩ
R1110	J00245333	" " " " 33kΩ
R1025,1063	J00245563	" " " " 56kΩ
R1026	J00245394	" " " " 390kΩ
R1064	J00245564	" " " " 560kΩ
R1027	J00245225	" " " " 2.2MΩ
		CAPACITOR
C1151	K30176151	Dipped mica 50WV 150pF
C1150	K30176331	" " " 330pF
C1178	K30176391	" " " 390pF
C1148	K30176431	" " " 430pF
C1124,1125	K30176471	" " " 470pF
C1146	K30176681	" " " 680pF
C1053,1099	K02179003	Ceramic " CH 2pF
C1019,1208	K02179004	" " CJ 3pF
C1066,1152, 1153	K02172040	" " CH 4pF
C1028,1063	K02173080	" " " 8pF
C1018,1064	K02173090	" " " 9pF
C1030,1065, 1069,1071	K02173100	" " " 10pF
C1026,1062, 1072	K02175120	" " " 12pF
C1021,1029	K02175150	" " " 15pF
C1025,1027, 1068,1070	K02175180	" " " 18pF
	K02179008	" " " 20pF
C1015–1017, 1020,1025	K02179009	" " " 22pF
C1022,1059	K02179010	" " " 24pF
C1024,1061, 1067	K02179011	" " " 27pF
C1013	K02179013	" " " 33pF
C1003,1205	K02175390	" " " 39pF
C1002,1206	K02175470	" " " 47pF
C1149	K02179016	" " " 51pF
C1014,1023, 1180,1181	K02175560	" " " 56pF
C1060	K02179017	" " " 62pF
C1001,1107, 1108	K02175820	" " " 82pF
C1049,1093	K00175101	" " SL 100pF
C1004,1204	K02175121	" " CH 120pF
C1006–1008	K13170103	" " 0.01μF

C1010,1012, 1031–1038, 1047,1048, 1051,1054, 1055,1058, 1073–1081, 1083–1085, 1087–1089, 1091,1094, 1095,1098, 1100,1101, 1106, 1121–1123, 1126–1131, 1135, 1137–1140, 1169–1171, 1174–1177, 1179,1182, 1183,1185, 1187–1194	K13170103	Ceramic	50WV	0.01μF	L1006,1007	L1190017	FL5H 102K 1mH
							TRANSFORMER
					T1001	L0020178	
					T1002,1003, 1018,1019	L0020892	
					T1004,1005	L0020894	
					T1006,1007, 1022,1023	L0020782	
					T1008,1009, 1024,1025	L0020891	
					T1010,1011, 1026,1027	L0020784	
					T1012,1013	L0020893	
					T1014,1015, 1030,1031	L0020890	
					T1016,1017, 1028,1029, 1032,1033	L0020785	
					T1020,1021	L0020781	
C1005,1050, 1052,1057, 1086,1102, 1103,1104, 1109, 1111–1120, 1154–1168, 1186	K13170473	"	"	0.047μF	T1034,1035	L0020788A	
					T1036	L0020789A	
					T1037,1038, 1043,1044	L0020504	
					T1039,1040	L0020501	
					T1041,1042	L0020502	
					T1045,1046, 1049,1050	L0020505	
C1142	K13179007	"	"	0.1μF	T1047,1048	L0020506	
C1144,1145, 1147	K50177102	Mylar	50WV	0.001μF	T1051,1052	L0020633	
C1011	K50177103	"	"	0.01μF			
C1056,1141	K50177473	"	"	0.047μF			**RECEPTACLE**
C1082,1092, 1110	K19149021	Semiconductor ceramic (UAT08X473K-L45AE)	25WV 0.047μF		J1001,1002	P0090134	PI051-06M
					J1003,1004	P0090137	PI051-09M
C1143,1173	K70127226	Tantalum	16WV	22μF	J1005	P0090140	PI051-12M
C1097	K40179012	Electrolytic (50RE475)	50WV	4.7μF	J1006,1007	P0090120	PI051-02M
C1105,1134, 1136	K40129004	" (16RE106)	16WV	10μF		Q5000011	Wrapping terminal C
C1009	K40129016	" (16RE226)	16WV	22μF			
C1039–1046, 1172,1184, 1195–1203	K40129008	" (16RE336)	16WV	33μF			
C1096	K40109002	" (10RE476)	10WV	47μF			
		INDUCTOR					
L1001,1025	L0020898						
L1002,1009	L0020491						
L1016	L0020625	T25-6					
L1013,1015	L1190005	FL4H 1R0M		1μH			
L1010	L1190007	FL4H 1R8M		1.8μH			
L1011	L1190008	FL4H 2R2M		2.2μH			
L1022,1024 1026,	L1190011	FL4H 4R7K		4.7μH			
L1021	L1190014	FL4H 100K		10μH			
L1012,1014, 1017,1020, 1023	L1190023	FL5H 220K		22μH			
L1005,1008	L1190033	FL5H 820K		82μH			
L1018,1019	L1190016	FL5H 101K		100μH			
L1003,1004	L1190017	FL5H 102K		1mH			

POWER SUPPLY FP-707

MAIN CHASSIS

Symbol No.	Part No.	Description
		TRANSISTOR
Q1,2,3	G3407170O	2SD717-O
		DIODE
D1	G2090121	Si (Bridge) S25VB10
		RESISTOR
R1	J30379002	Cement 5W 10Ω (SQ5L 10Ω)
R2,3,4	J30379001	Cement 5W 0.05Ω (SQ5L R05)
		CAPACITOR
C1,2	K12329001	Ceramic 1.4KVDC 0.01μF (ECK-DAL103PE)
C6	K13170473	" 50WV 0.047μF (DB207YF473Z5L5)
C7	K40120108	Electrolytic 16WV 1000μF (16RL1000)
C3,4,5	K43140005	" 25WV 33000μF (25LE33000)
		POWER TRANSFORMER
PT1	L3030081	
		SPEAKER
SP1	M4090048	SE128D-1 4Ω 3W
		RELAY
RL1	M1090016	FRL263D012/01CS-OE
		SWITCH
S1	N2090024	8H2011
	S6000026	Switch lever (gray)
	Q5000008	OUTPUT TERMINAL
	Q5000009	T203 (red)
		T203 (black)
		FUSE HOLDER
FH1	P2000012	SN2059
		FUSE
F1 (100V-117V)	Q0000012	6A
F1 (200V-234V)	Q0000004	3A
		PILOT LAMP (LED)
PL1	G2090141	DB20 (Red)
		TERMINAL BOARD
	Q6000013	1L5P(S) (2-0-3)
	Q6000014	1L5P(S) (3-0-2)
	DC/SP	**CONNECTION CORD**
	T9203030	
	P1090042	POWER PLUG QMS-P4FK
	P0090034	SPEAKER PLUG P2240
		AC POWER CORD
	T9000180	2 wire, 2 prong plug
	T9000482	3 wire, 3 prong plug (UL)
	*T9013283	3 wire, 3 prong Australian plug
	*T9013284	3 wire, 2 prong EU plug
		AC POWER SOCKET
		***(200V-234V only)**
	P0090094	PA125

AVR UNIT

Symbol No.	Part No.	Description
PB2156	F0002156	Printed Circuit Board
	C0021560	PCB with components
		FET, TRANSISTOR
Q101	G3090036	FET 2SK19TM-BL
Q103	G3109500Y	TR 2SA950-Y
Q102	G3110120Y	" 2SA1012-Y
		DIODE
D101,102,105	G2090001	Si 10D1
D104	G2015550	" 1S1555
D103	G2090047	Zener WZ061
		RESISTOR
R106	J10276270	Carbon composition 1/2W GK 27Ω
R101	J10245560	" film 1/4W VJ 56Ω
R102	J10245821	" " " " 820Ω
R105	J10245222	" " " " 2.2kΩ
R103,104	J10245332	" " " " 3.3kΩ
		POTENTIOMETER
VR101	J50735472	CR29R4.7KB 4.7KΩB
		CAPACITOR
C104	K50177223	Mylar 50WV 0.022μF
C103	K50177473	" " 0.047μF
C101	K40149010	Electrolytic 25WV 330μF (25RE330)
C102,105	K40129011	" 16WV 1000μF (16RE1000)

YAESU FP-707

EXTERNAL POWER SUPPLY

FOR

FT-707 HF TRANSCEIVER

* * * * * * * * * * * * *

The FP-707 is a quality external AC power supply for the FT-707 HF SSB transceiver. Excellent regulation and conservative design assure the owner of many years of trouble-free operation.

INSTALLATION

Before connecting the FP-707 to any power source, be absolutely certain that the voltage specification on the rear panel matches your local supply voltage. The FP-707 is manufactured for use around the world, from a variety of power sources, and the power transformer primary must be connected properly to prevent damage to the internal circuitry.

Also, be absolutely certain to use a fuse of the proper rating. For 100/110/117 VAC, use only a 6 amp fuse. For 200/220/234 VAC, use only a 3 amp fuse.

> WARNING
>
> OUR WARRANTY DOES NOT COVER DAMAGE CAUSED BY IMPROPER SUPPLY VOLTAGE NOR USE OF AN IMPROPER FUSE.

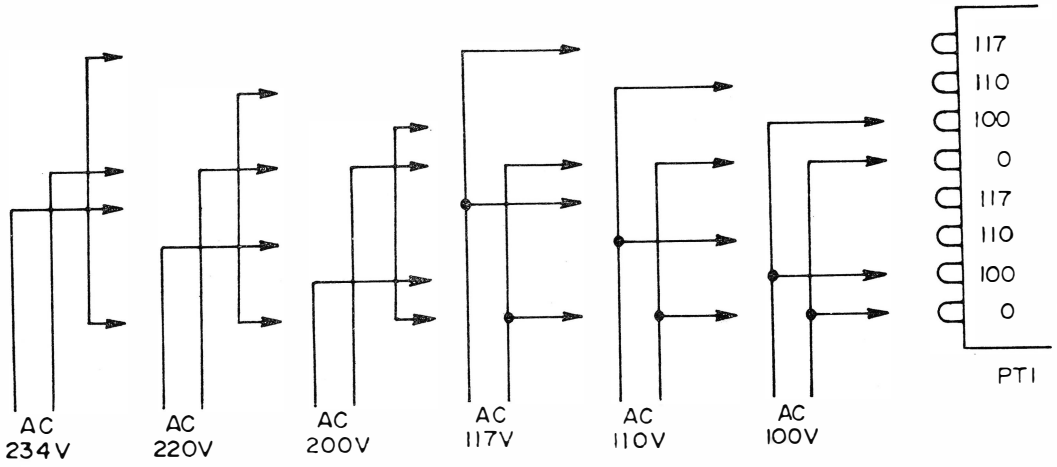

POWER TRANSFORMER PRIMARY CONNECTIONS

When all inspections have been duly completed, proceed with installation. Refer to the drawing, and connect the output cable from the FP-707 to the DC 13.5V jack on the rear panel of the FT-707.

The speaker plug may be connected to the FT-707 rear panel SP jack, if desired. Connection of this plug to the SP jack automatically cuts off the transceiver's internal speaker.

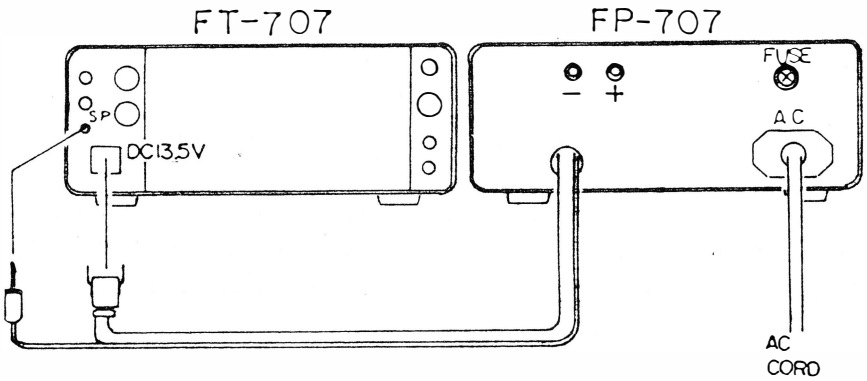

OPERATION

Turn the FP-707 power switch ON to activate the power supply. Always turn the FP-707 power switch on before turning on the transceiver power switch.

SPECIFICATIONS: FP-707

Output voltage: 14.0VDC ±0.2V (no load)

Output current: 20 amps @ 50% duty cycle

Regulation: Better than 5% at rated load

Ambient temperature: -20° - +50° C

Input voltage: 100/110/117/200/220/234 VAC, 50/60 Hz

Case dimensions: 93 (H) x 240 (W) x 235 (D) mm

Weight: Approx. 7.4 kg

Speaker output specifications: 3 watts at 4 ohms

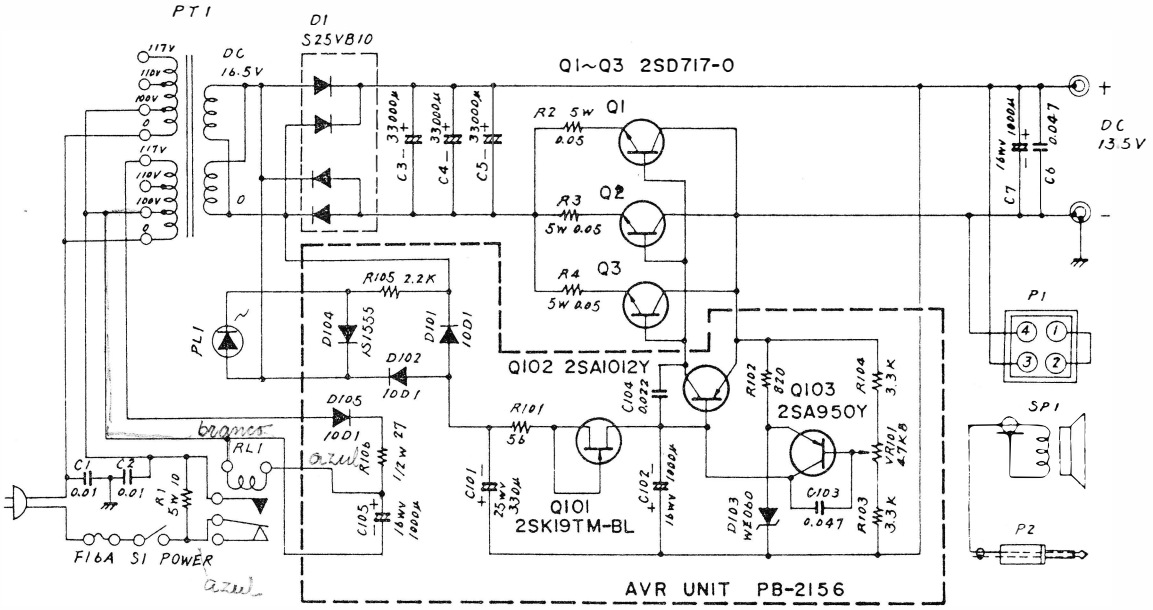

FP-707
CIRCUIT DIAGRAM

WIRING DIAGRAM

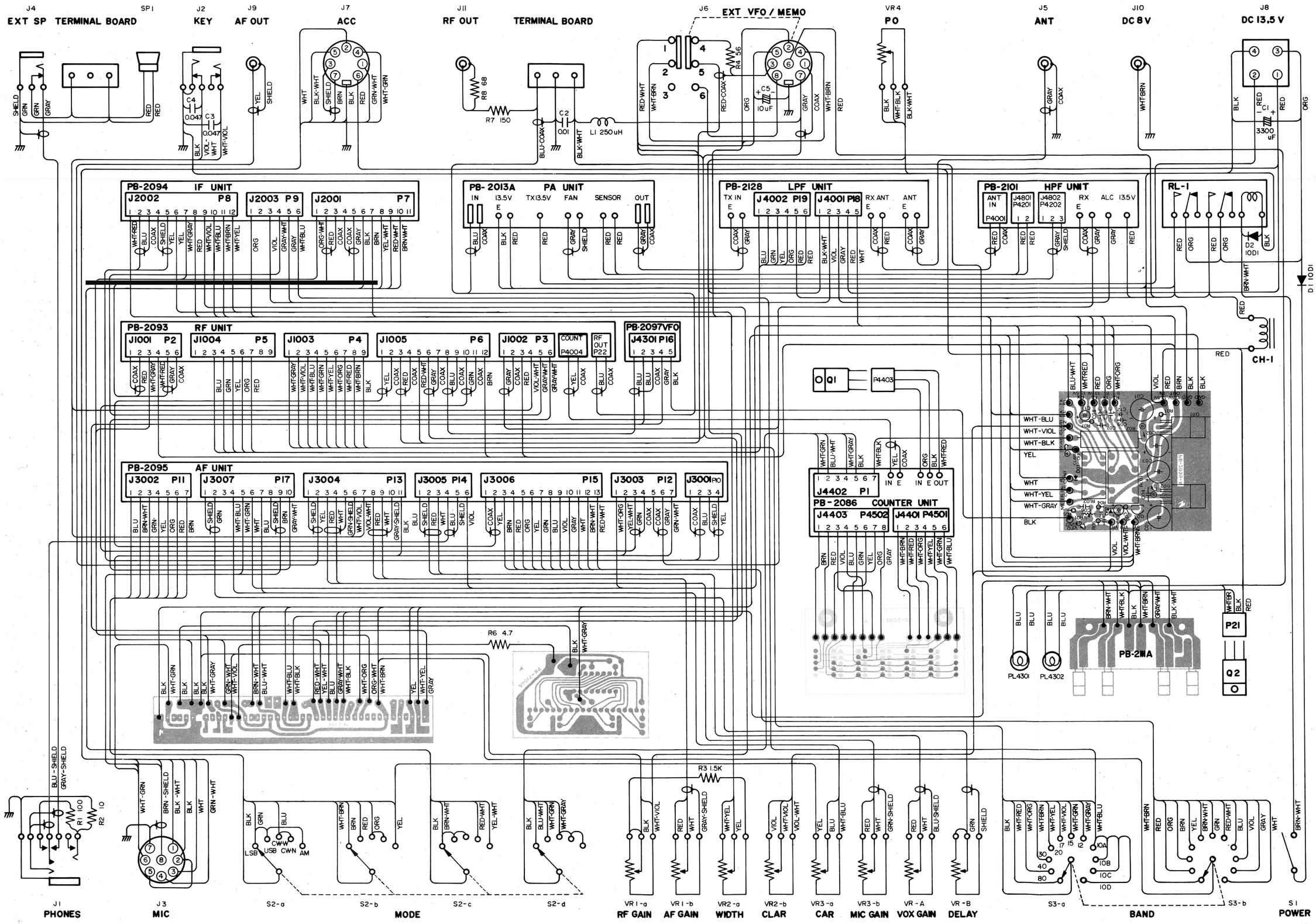

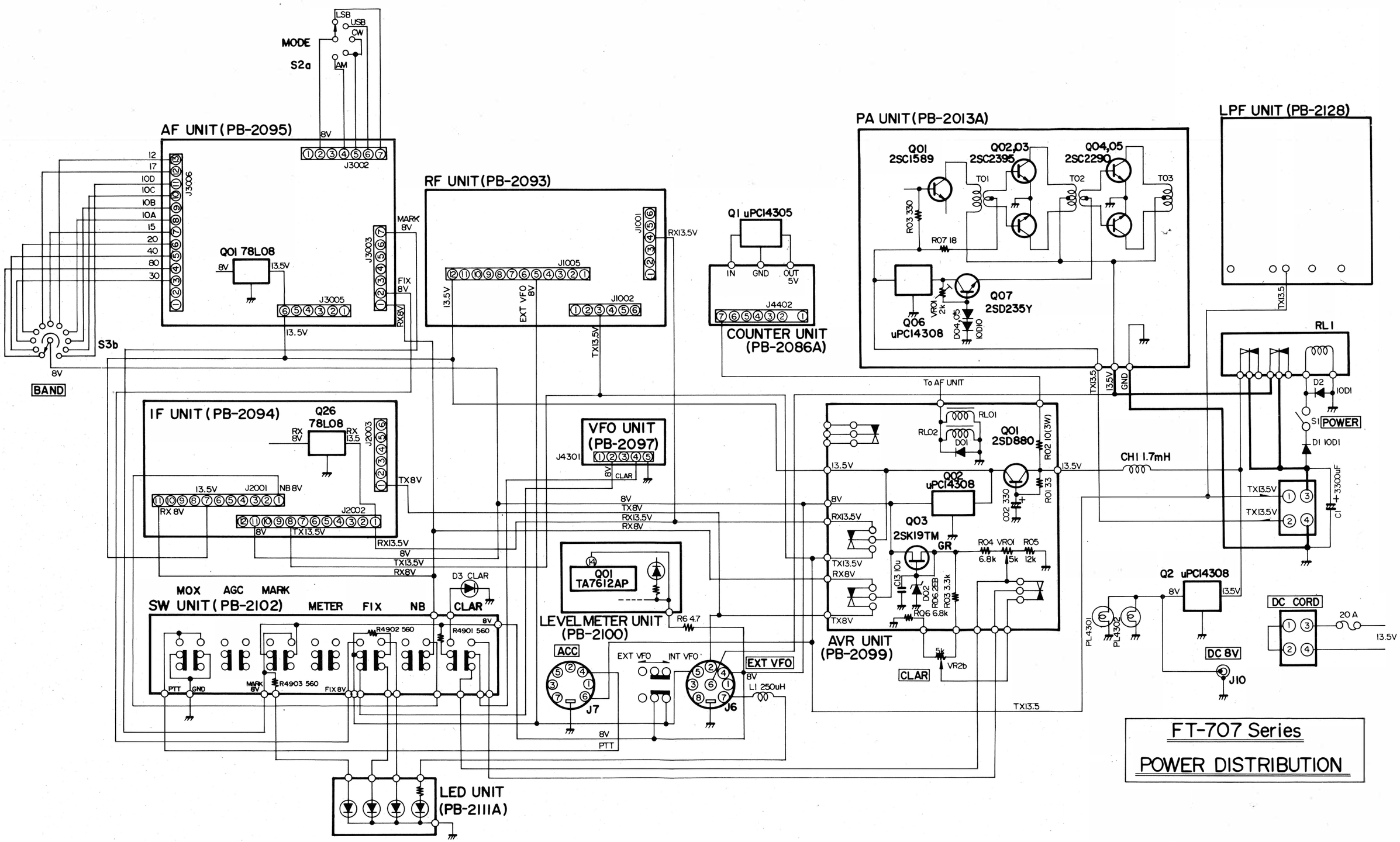

FT-707 Series

POWER DISTRIBUTION

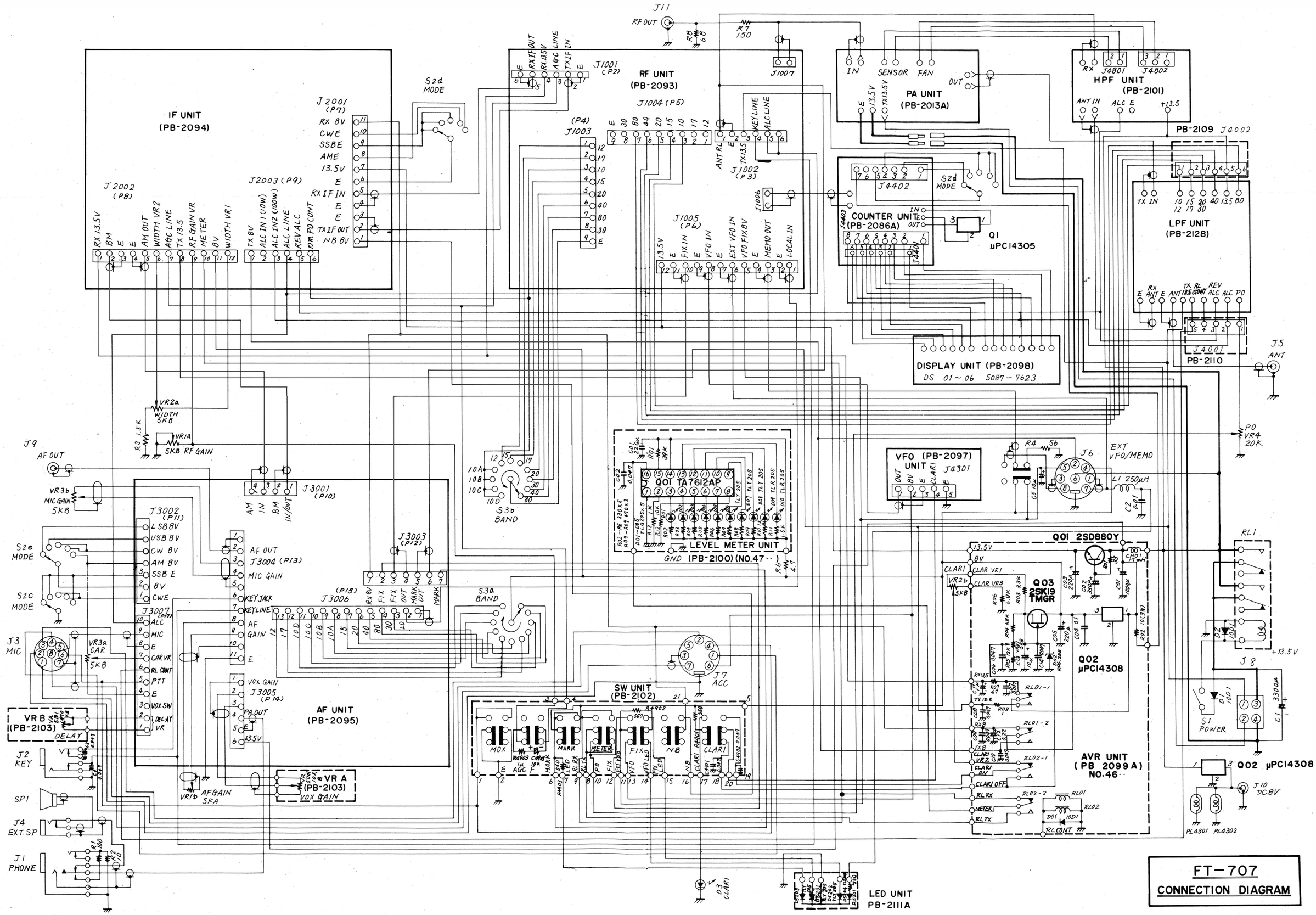
IF UNIT
(PB-2094)
RF UNIT
(PB-2093)
PA UNIT
(PB-2013A)
HPF UNIT
(PB-2101)
PB-2109
LPF UNIT
(PB-2128)
COUNTER UNIT
(PB-2086A)
Q1
μPC14305
DISPLAY UNIT (PB-2098)
DS 01~06 5087-7623
PB-2110
VFO (PB-2097)
UNIT
LEVEL METER UNIT
(PB-2100) (NO.47··)
Q01 TA7612AP
AF UNIT
(PB-2095)
SW UNIT
(PB-2102)
AVR UNIT
(PB 2099A)
NO.46··
Q01 2SD880Y
Q03
2SK19
TMGR
Q02
μPC14308
VR B
(PB-2103)
VR A
(PB-2103)
LED UNIT
PB-2111A
FT-707
CONNECTION DIAGRAM

YAESU